United States Patent [19]

Oliver et al.

[11] **Patent Number: 4,656,469**

[45] **Date of Patent: Apr. 7, 1987**

[54] **ACTIVATED WORK AND METHOD OF FORMING SAME**

[76] Inventors: **Earl H. Oliver,** 2516 St. Anthony Rd., Minneapolis, Minn. 55418; **Alfred E. Hall,** 14943 Hillcrest Rd.; **John L. Sigalos,** 7335 Tophill Cir., both of Dallas, Tex. 75248

[21] Appl. No.: **871,125**

[22] Filed: **May 30, 1986**

Related U.S. Application Data

[63] Continuation of Ser. No. 553,102, Nov. 17, 1983, abandoned.

[51] **Int. Cl.**[4] **G09G 3/36**

[52] **U.S. Cl.** **340/802;** 340/784; 340/716; 40/454; 128/736

[58] **Field of Search** ..... 340/705, 716, 802, 784, 340/785, 286 M; 40/454; 350/357; 128/736

[56] **References Cited**

U.S. PATENT DOCUMENTS

Re. 28,199	10/1974	Deb et al.	340/785
1,475,430	11/1923	Curwen	40/454
2,826,844	3/1958	Leika .	
3,096,271	7/1963	Hespenheide	340/785
3,803,580	4/1974	Shattuck	340/286 M
4,209,824	6/1980	Kaufman	362/98
4,286,399	9/1981	Funahashi et al.	40/124.1
4,299,041	11/1981	Wilson	40/124.1
4,363,081	12/1982	Wilbur	362/98
4,371,870	2/1983	Biferno	340/716
4,403,216	9/1983	Yokoi	340/705
4,437,471	3/1984	Nelson	128/736
4,497,126	2/1985	Dejean	40/124.1

Primary Examiner—Marshall M. Curtis
Attorney, Agent, or Firm—Sigalos & Levine

[57] **ABSTRACT**

The present invention relates to a novel and unique activated work such as a child's book or a greeting card having at least two turnable pages in juxtaposed relationship and which is formed having a portion thereof that is essentially invisible in a first state but visible in a second state. Electrical signals are coupled to the second portion for selectively and reversibly changing the second portion from the invisible to the visible state when the pages are moved from their juxtaposed relationship.
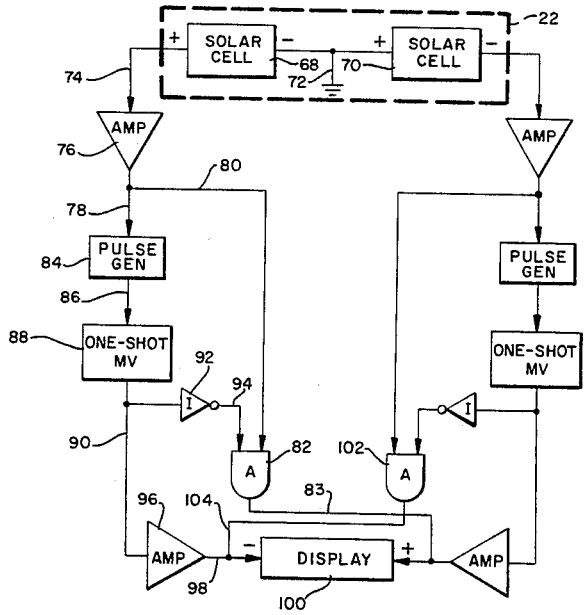
15 Claims, 22 Drawing Figures