INPUT-OUTPUT CONVERSION APPARATUS

Filed Sept. 25, 1964 3 Sheets-Sheet 2

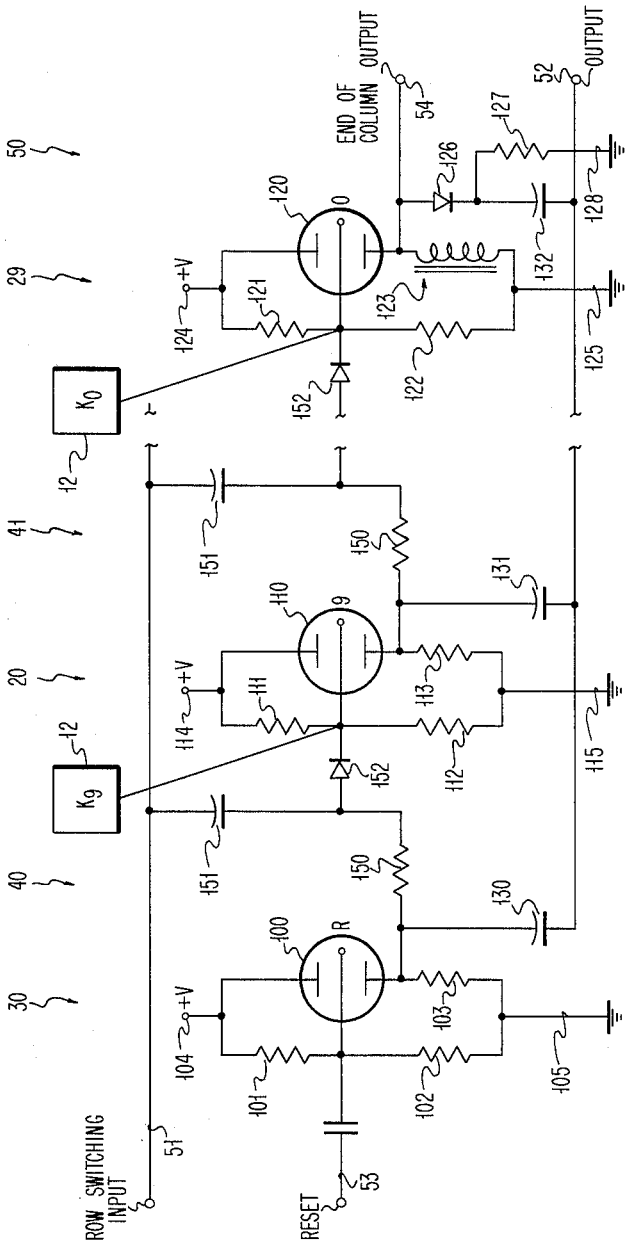

FIG. 3