US009142369B2

(12) **United States Patent**
Yurochko et al.

(10) **Patent No.: US 9,142,369 B2**
(45) **Date of Patent: Sep. 22, 2015**

(54) **STACK ASSEMBLY FOR IMPLEMENTING KEYPADS ON MOBILE COMPUTING DEVICES**

(75) Inventors: **Michael Yurochko**, Los Gatos, CA (US); **Arthur Zarnowitz**, San Jose, CA (US); **Peter Skillman**, San Carlos, CA (US)

(73) Assignee: **QUALCOMM Incorporated**, San Diego, CA (US)

(*) Notice: Subject to any disclaimer, the term of this patent is extended or adjusted under 35 U.S.C. 154(b) by 1105 days.

(21) Appl. No.: **11/080,375**

(22) Filed: **Mar. 14, 2005**

(65) **Prior Publication Data**

US 2006/0204303 A1 Sep. 14, 2006

(51) **Int. Cl.**

G06F 3/02	(2006.01)
H01H 13/83	(2006.01)
H01H 13/85	(2006.01)
H04M 1/22	(2006.01)

(52) **U.S. Cl.**

CPC ***H01H 13/83*** (2013.01); ***G06F 3/0202*** (2013.01); ***H01H 13/85*** (2013.01); *H04M 1/22* (2013.01)

(58) **Field of Classification Search**

None

See application file for complete search history.

(56) **References Cited**

U.S. PATENT DOCUMENTS

1,718,694	A		6/1929	Kurowski
3,369,643	A		2/1968	Avgerinos et al.
3,396,827	A		8/1968	Harwell
3,744,034	A		7/1973	Paul
3,937,952	A		2/1976	Ripley et al.
4,022,993	A		5/1977	Shattuck
4,060,703	A	*	11/1977	Everett, Jr. ..... 200/5 A
4,180,336	A		12/1979	Lonsdale
4,196,666	A		4/1980	Hiki et al.
4,237,351	A		12/1980	Boulanger et al.
4,320,268	A	*	3/1982	Brown ..... 200/5 A
4,359,612	A		11/1982	Rooney
4,359,613	A		11/1982	Rooney
4,559,705	A		12/1985	Hodge et al.
4,564,751	A		1/1986	Alley et al.
RE32,419	E		5/1987	Rooney
4,679,951	A		7/1987	King et al.
4,762,227	A		8/1988	Patterson
4,802,210	A		1/1989	Spencer et al.

(Continued)

FOREIGN PATENT DOCUMENTS

DE	10203400	6/2003
EP	0760291 A2	3/1997

(Continued)

OTHER PUBLICATIONS

"Nokia 9500 Up Close", from www.phonescoop.com, Jun. 27, 2006, 2 pages.

(Continued)

Primary Examiner — Jill Culler

(74) *Attorney, Agent, or Firm* — Mahamedi Paradice LLP

(57) **ABSTRACT**

A stack assembly for use with a mobile computing device. In one embodiment, the stack assembly includes an electrical contact layer, and actuation member layer, and an illumination layer. The electrical contact layer includes a plurality of contact elements. The actuation member layer includes a plurality of actuation members are, wherein each actuation member is aligned so that an axial movement of that member causes a corresponding one of the plurality of contact elements to actuate. The illumination layer is configured to emit light to the keypad.
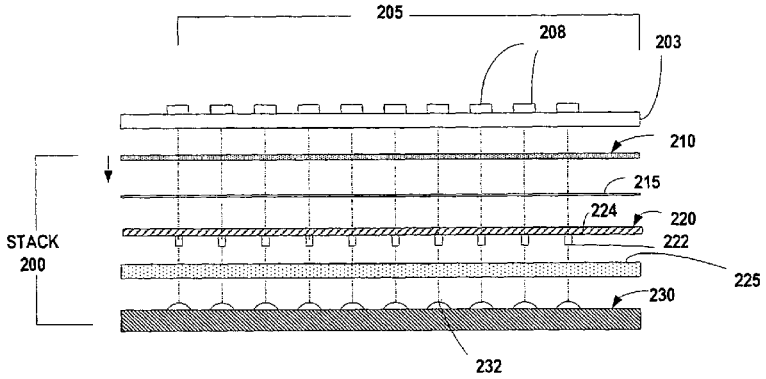
24 Claims, 8 Drawing Sheets