TAPE APPLICATOR

Filed Aug. 31, 1967 2 Sheets-Sheet 2

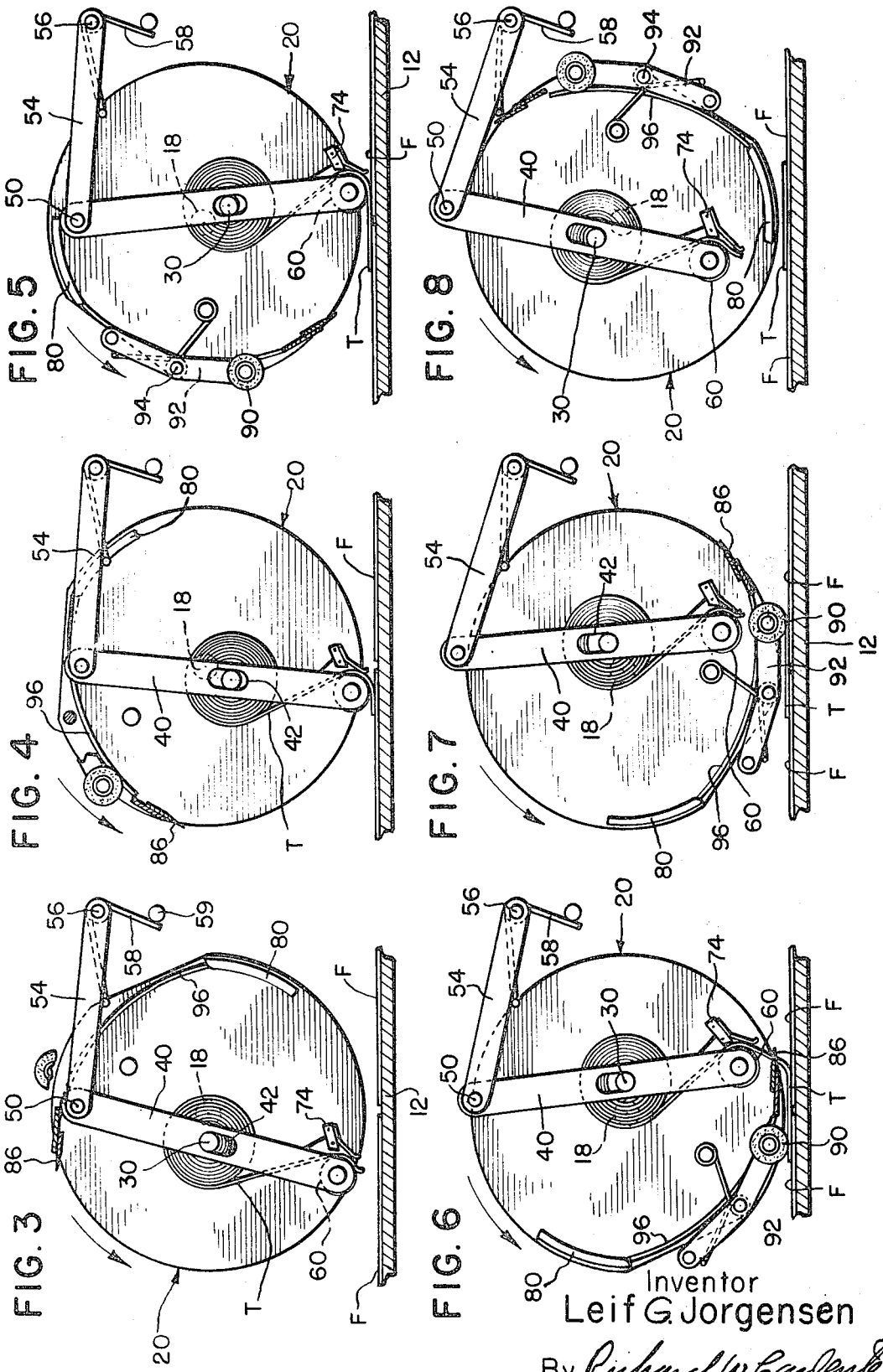

Inventor
Leif G. Jorgensen
By Richard W. Carpenter
Attorney