US009638369B1

(12) **United States Patent**
Spilker

(10) **Patent No.: US 9,638,369 B1**
(45) **Date of Patent: May 2, 2017**

(54) **ICE MAKER PROTECTION BOX SYSTEMS**

(71) Applicant: **Jeff Spilker**, Colorado Springs, CO (US)

(72) Inventor: **Jeff Spilker**, Colorado Springs, CO (US)

(*) Notice: Subject to any disclaimer, the term of this patent is extended or adjusted under 35 U.S.C. 154(b) by 0 days.

(21) Appl. No.: **14/334,732**

(22) Filed: **Jul. 18, 2014**

Related U.S. Application Data

(60) Provisional application No. 61/858,571, filed on Jul. 25, 2013.

(51) **Int. Cl.**

F16L 57/00	(2006.01)
F16L 57/02	(2006.01)
F16L 57/06	(2006.01)
F16L 5/10	(2006.01)

(52) **U.S. Cl.**
CPC ***F16L 57/06*** (2013.01); ***F16L 57/00*** (2013.01); ***F16L 57/02*** (2013.01); *F16L 5/10* (2013.01)

(58) **Field of Classification Search**
CPC ... F16L 5/10; F16L 57/00; F16L 57/02; F16L 57/06
USPC 137/360, 377, 382
See application file for complete search history.

(56) **References Cited**

U.S. PATENT DOCUMENTS

3,540,747	A *	11/1970	Stjernstrom	F16J 15/106 174/153 G
D257,761	S	1/1981	Abel	
D330,734	S *	11/1992	Luten	D21/392
D336,424	S	6/1993	Barber	
5,988,208	A *	11/1999	Tudhope	F16L 35/00 137/360
6,467,734	B1	10/2002	Brown	
6,604,890	B2	8/2003	Tresch	
D523,740	S	6/2006	Harris	
7,077,156	B1 *	7/2006	Humber	F16K 27/0218 137/360
7,159,406	B2	1/2007	Schuchart	
8,245,862	B2 *	8/2012	Gates, II	H01R 25/006 220/3.8
8,567,432	B2 *	10/2013	Ericksen	F16K 27/12 137/343
2004/0211162	A1 *	10/2004	Henrikson	B01D 46/10 55/385.2
2008/0093365	A1 *	4/2008	Catron	A61J 1/1437 220/345.1
2009/0145493	A1 *	6/2009	Lee	E03C 1/021 137/360

* cited by examiner

Primary Examiner — Mary McManmon
Assistant Examiner — Richard K Durden
(74) *Attorney, Agent, or Firm* — Spencer Fane LLP

(57) **ABSTRACT**

The ice maker protection box system is a durable plastic box assembly that mounts on the wall around a water valve assembly, and protects a refrigerator water supply line from pinching and kinking. It has a transparent cover which slides upwardly along flanges to access the water connection. The ice maker protection box assembly further provides ample space behind a refrigerator for airflow to maximize refrigeration potential.
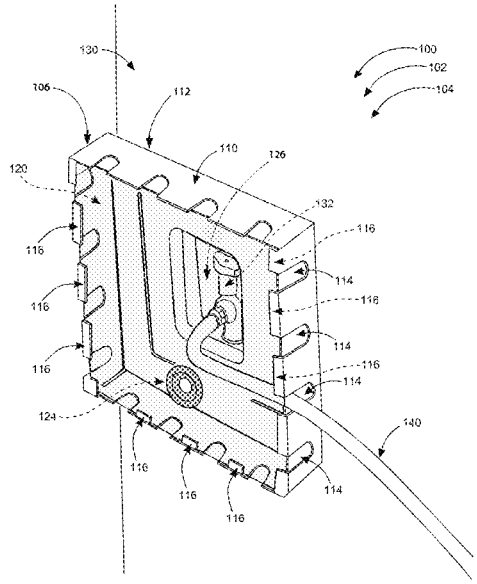
14 Claims, 5 Drawing Sheets