May 5, 1964 S. VEGA ETAL 3,131,869

COOLANT DEVICE FOR MACHINE TOOLS

Filed April 2, 1962

FIG. 1

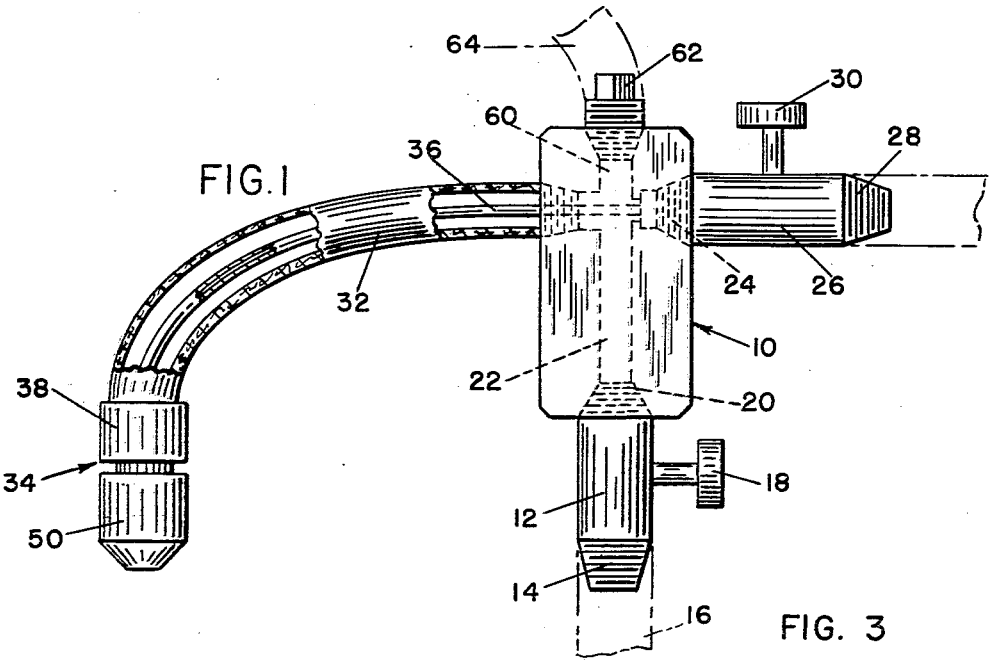

FIG. 3

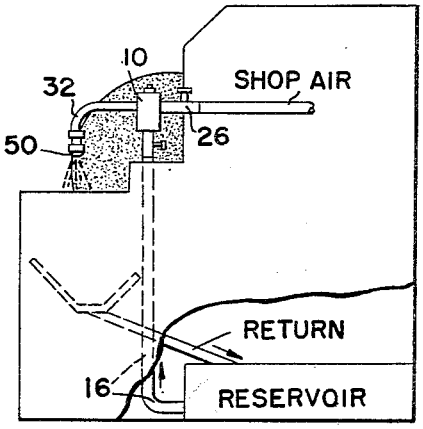

FIG. 2

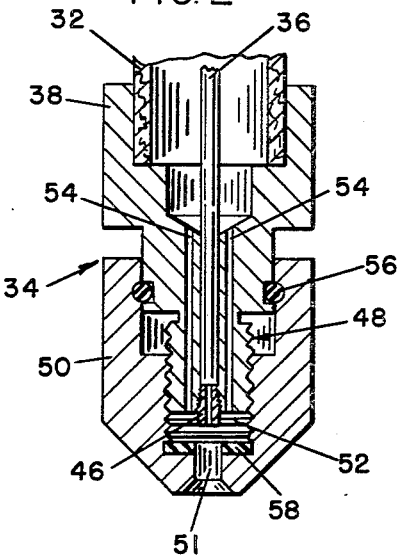

INVENTORS
SEBASTIAN VEGA
SAMUEL G. WALKER

by Charles R. Fay,

ATTORNEY