No. 818,869. PATENTED APR. 24, 1906.

W. R. CALVERT.

GOODS HANDLER.

APPLICATION FILED SEPT. 28, 1905.

Fig. 1.

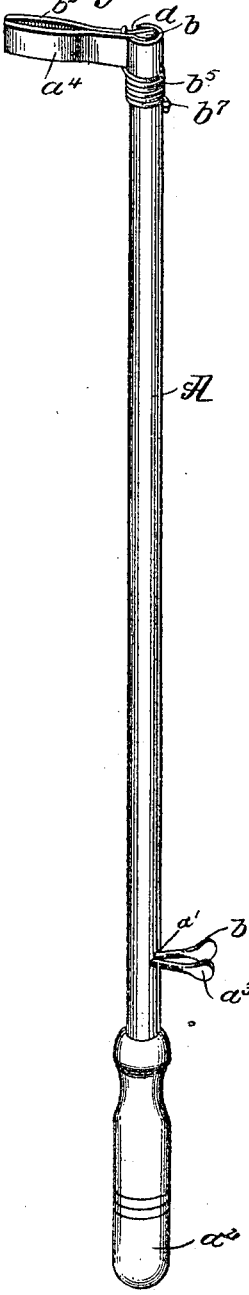

Fig. 2.

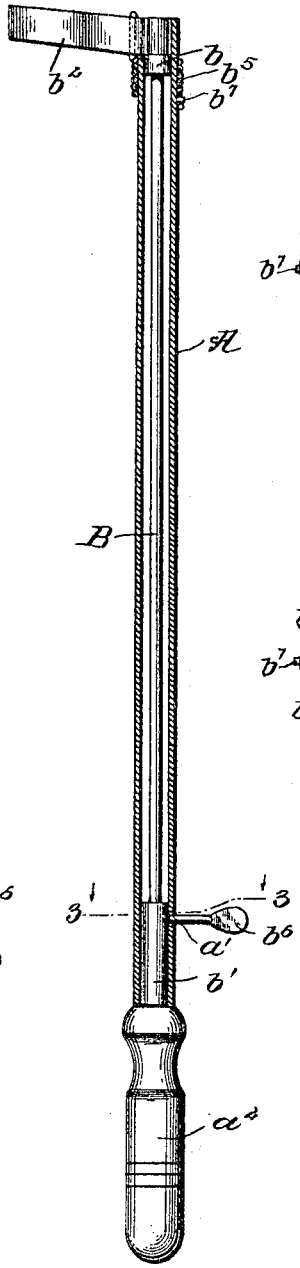

Fig. 4.

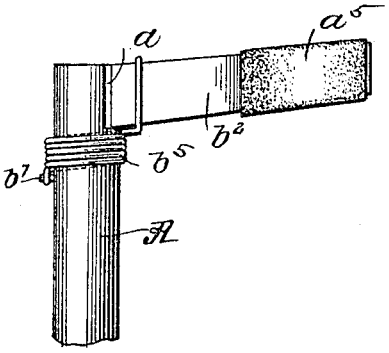

Fig. 5.

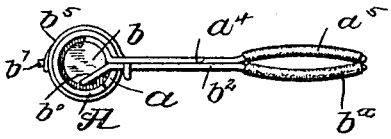

Fig. 3.

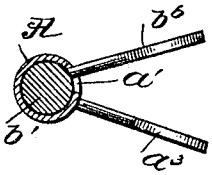

WITNESSES:

Samuel E. Wade

C. E. Grainor

INVENTOR

WALTER R. CALVERT.

BY Munn & Co.

ATTORNEYS

ANDREW R. GRAHAM CO., PHOTO-LITHOGRAPHERS, WASHINGTON, D. C.