AUTOMATIC SAMPLE COLLECTING APPARATUS

Filed Feb. 28, 1963 5 Sheets-Sheet 4

Fig. 7.

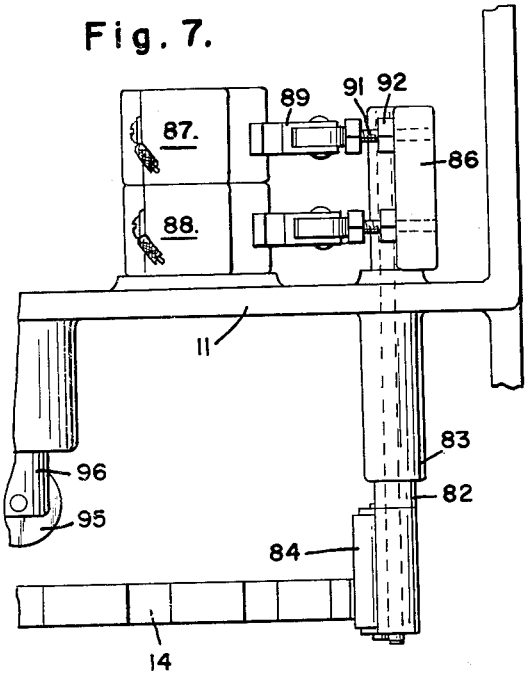

Fig. 8.

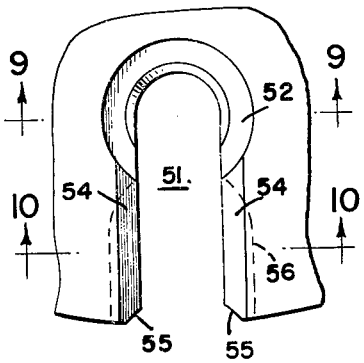

Fig. 9.

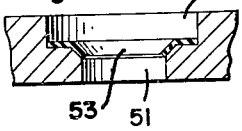

Fig. 10.

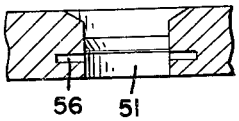

Fig. 12.

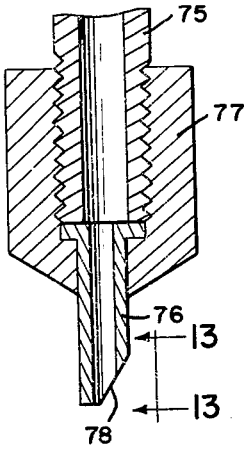

Fig. 13.

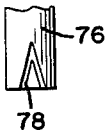

Fig. 11.

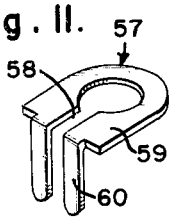

INVENTORS
EARLE M. TAFT
KEENE P. DIMICK
ARTHUR D. SUHR
HUBERT N. DIVELBISS
By Townsend and Townsend
attorneys