AUTOMATIC SAMPLE COLLECTING APPARATUS

Filed Feb. 28, 1963 5 Sheets-Sheet 2

Fig. 3.

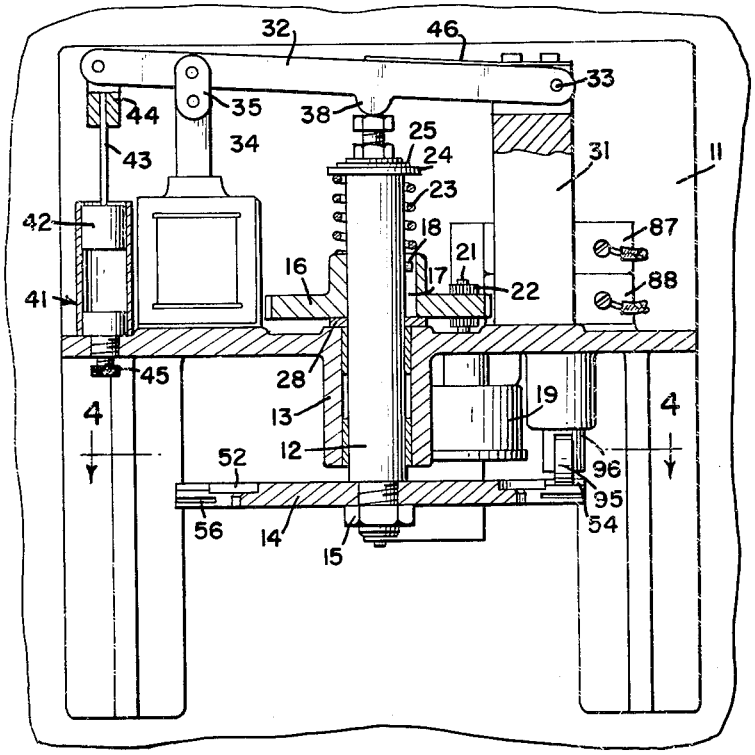

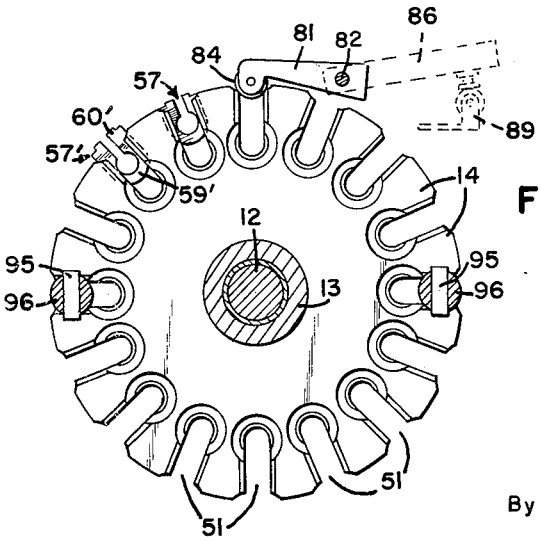

Fig. 4.

INVENTORS
EARLE M. TAFT
KEENE P. DIMICK
ARTHUR D. SUHR
HUBERT N. DIVELBISS
By Townsend and Townsend
attorneys