AUTOMATIC SAMPLE COLLECTING APPARATUS

Filed Feb. 28, 1963 5 Sheets-Sheet 1

Fig. 1.

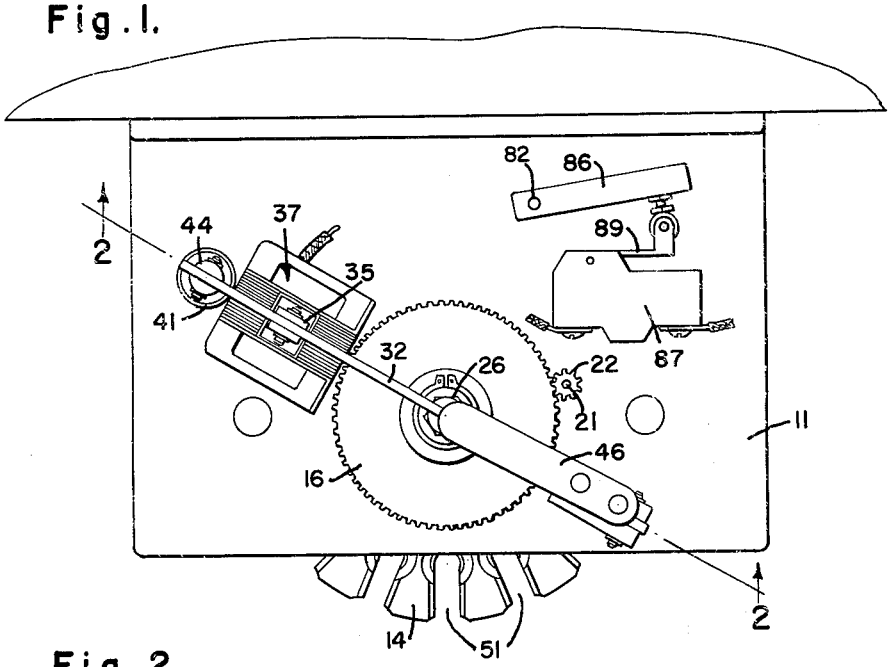

Fig. 2.

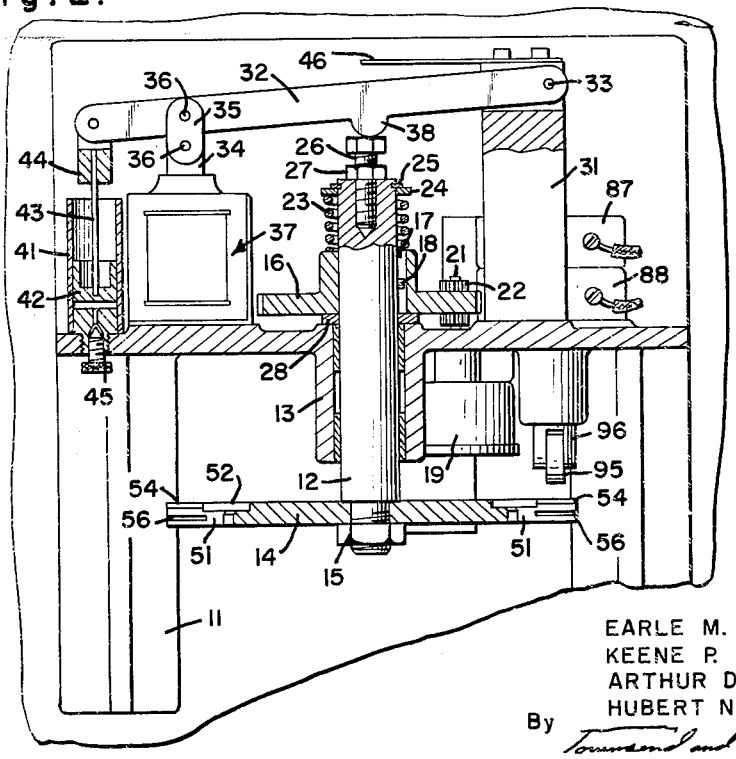

INVENTORS
EARLE M. TAFT
KEENE P. DIMICK
ARTHUR D. SUHR
HUBERT N. DIVELBISS
By Townsend and Townsend
attorneys