Oct. 12, 1971

A. J. BELLI

3,611,469

SASH PAINT APPLICATOR

Filed May 1, 1970

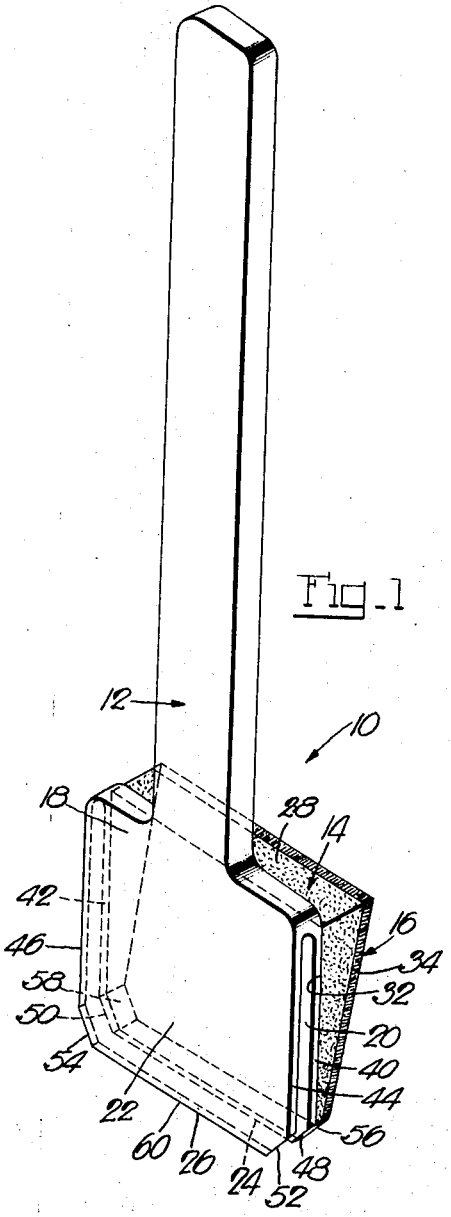

Fig. 1

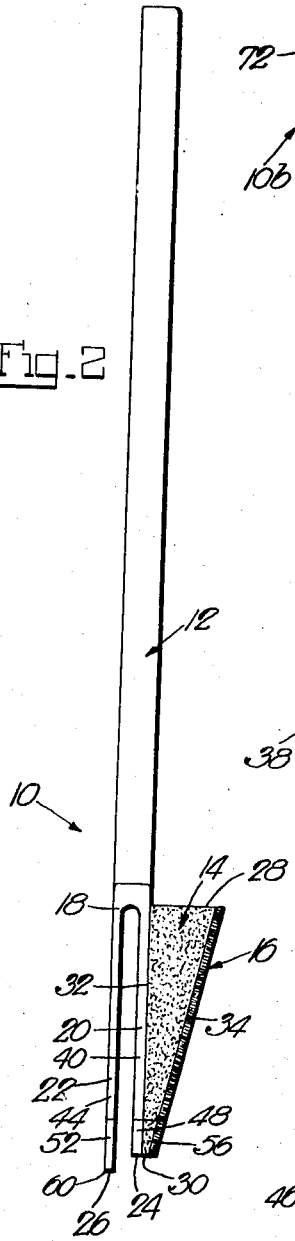

Fig. 2

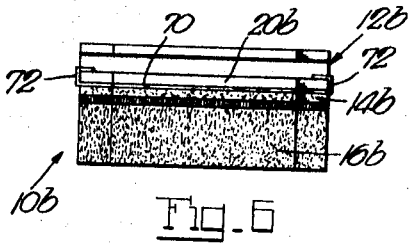

Fig. 6

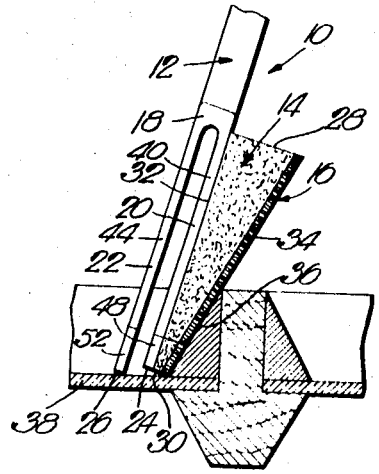

Fig. 3

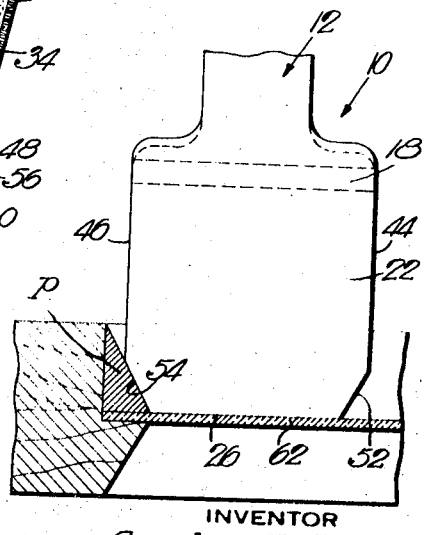

Fig. 4

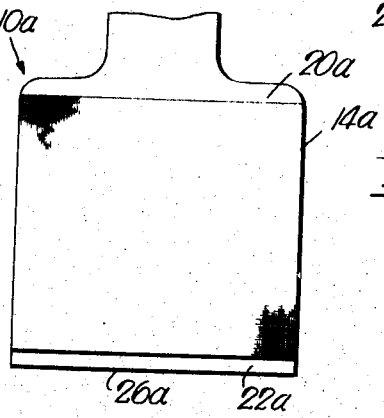

Fig. 5

INVENTOR

Anselmo J. Belli

BY

ATTORNEY