US009411169B2

(12) **United States Patent**
Park et al.

(10) **Patent No.: US 9,411,169 B2**
(45) **Date of Patent: Aug. 9, 2016**

(54) **SCREEN AND LASER DISPLAY APPARATUS USING THE SAME**

(71) Applicant: **LG ELECTRONICS INC.**, Seoul (KR)

(72) Inventors: **Woojae Park**, Seoul (KR); **Jaewook Kwon**, Seoul (KR); **Chanyoung Yoon**, Seoul (KR)

(73) Assignee: **LG ELECTRONICS INC.**, Seoul (KR)

(*) Notice: Subject to any disclaimer, the term of this patent is extended or adjusted under 35 U.S.C. 154(b) by 0 days.

(21) Appl. No.: **14/640,300**

(22) Filed: **Mar. 6, 2015**

(65) **Prior Publication Data**

US 2016/0033785 A1 Feb. 4, 2016

(30) **Foreign Application Priority Data**

Aug. 1, 2014 (KR) 10-2014-0099284

(51) **Int. Cl.**

G03B 21/56	(2006.01)
G02B 27/48	(2006.01)
G02B 5/02	(2006.01)
G02B 6/08	(2006.01)

(52) **U.S. Cl.**

CPC ***G02B 27/48*** (2013.01); ***G02B 5/0221*** (2013.01); ***G02B 5/0263*** (2013.01); ***G03B 21/56*** (2013.01); *G02B 6/08* (2013.01)

(58) **Field of Classification Search**

CPC G03B 21/56; G02B 27/48; G02B 6/08; H04N 9/3147

USPC 359/443, 460

See application file for complete search history.

(56) **References Cited**

U.S. PATENT DOCUMENTS

4,573,082	A *	2/1986	Jeskey	348/832
5,029,975	A	7/1991	Pease	
5,594,561	A *	1/1997	Blanchard	349/59
5,626,410	A *	5/1997	Chambers et al.	353/94
5,851,740	A	12/1998	Sawyer	
2002/0085278	A1 *	7/2002	Kolosowsky	359/460
2003/0151727	A1 *	8/2003	Glent-Madsen et al.	353/94
2006/0176555	A1 *	8/2006	Kuo et al.	359/460
2007/0268578	A1 *	11/2007	Katase	359/460
2010/0118397	A1	5/2010	Powell et al.	
2012/0155800	A1	6/2012	Cottrell et al.	
2013/0010356	A1	1/2013	Curtis et al.	

OTHER PUBLICATIONS

International Search Report issued in Application No. PCT/KR2015/001753 dated May 29, 2015.

* cited by examiner

Primary Examiner — Christopher Mahoney
(74) *Attorney, Agent, or Firm* — Ked & Associates, LLP

(57) **ABSTRACT**

There is disclosed a screen including a first diffusion plate for transmitting a laser light for image display, a second diffusion plate spaced apart a preset distance from the first diffusion plate, and a plurality of optical transmission tubes arranged between the first diffusion plate and the second diffusion plate to transfer the laser light transmitted from the first diffusion plate to the second diffusion plate, wherein the optical transmission tube includes a body portion comprising a first surface facing the first diffusion plate and a second surface facing the second diffusion plate, vided in the body portion to a central region of the second surface provided in the body portion, and at least one optical fiber arranged in the through hole to transfer the laser light, only to reduce speckle noise of laser, and a laser display apparatus using the same.
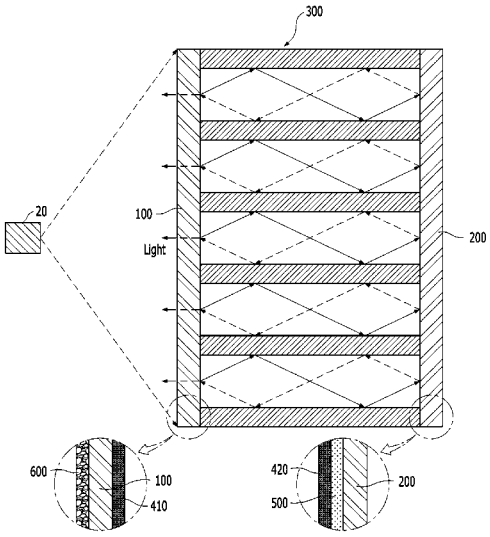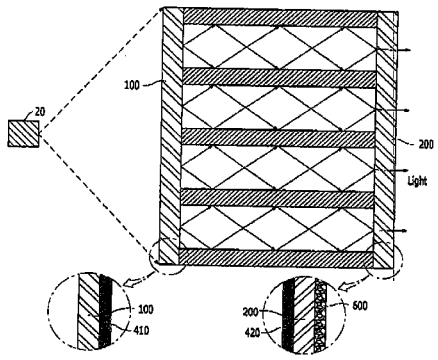
21 Claims, 22 Drawing Sheets