US009410569B2

(12) **United States Patent**
Gray

(10) **Patent No.: US 9,410,569 B2**
(45) **Date of Patent: Aug. 9, 2016**

(54) **REMOVABLE PANEL FASTENER**

(71) Applicant: **Richard W. Gray**, Moorpark, CA (US)

(72) Inventor: **Richard W. Gray**, Moorpark, CA (US)

(*) Notice: Subject to any disclaimer, the term of this patent is extended or adjusted under 35 U.S.C. 154(b) by 212 days.

(21) Appl. No.: **14/154,742**

(22) Filed: **Jan. 14, 2014**

(65) **Prior Publication Data**

US 2014/0223717 A1 Aug. 14, 2014

Related U.S. Application Data

(60) Provisional application No. 61/764,912, filed on Feb. 14, 2013.

(51) **Int. Cl.**
F16B 19/04 (2006.01)
F16B 21/12 (2006.01)
F16B 5/06 (2006.01)

(52) **U.S. Cl.**
CPC ***F16B 21/125*** (2013.01); ***F16B 5/0642*** (2013.01); *Y10T 29/49815* (2015.01); *Y10T 29/49947* (2015.01)

(58) **Field of Classification Search**
CPC F16B 21/125; F16B 5/0642; F16B 21/09; F16B 21/20; F16B 21/16
USPC 411/511, 342, 344, 347, 348, 345, 549, 411/500; 292/147, 152, 153, 323; 403/319, 403/321, 322.1, 325; 70/33, 34, 173, 345, 70/368, 387, 388
See application file for complete search history.

(56) **References Cited**

U.S. PATENT DOCUMENTS

2,310,756 A * 2/1943 Tinnerman B25B 27/20 411/525
2,352,392 A * 6/1944 Kost F16B 21/09 24/704.1
2,945,712 A * 7/1960 Lewis F16B 2/241 29/453
3,186,196 A * 6/1965 Moberg E05B 67/365 292/252
3,390,712 A * 7/1968 McKay F16B 39/04 24/453
4,287,644 A 9/1981 Durand
4,297,063 A * 10/1981 Hart F16B 41/002 411/199
4,728,238 A 3/1988 Chisholm et al.
4,861,208 A 8/1989 Boundy
4,919,373 A 4/1990 Caveney et al.
5,117,745 A 6/1992 Prochnow et al.
5,339,501 A 8/1994 Gugle et al.
5,366,332 A * 11/1994 Murphy F16B 5/0642 411/342
5,682,775 A * 11/1997 Baber E05B 65/0864 70/34
5,713,224 A * 2/1998 Liou E05B 15/101 70/128
5,797,714 A 8/1998 Oddenino

(Continued)

Primary Examiner — Gary Estremsky
(74) *Attorney, Agent, or Firm* — SoCal IP Law Group LLP; John E. Gunther; Steven C. Sereboff

(57) **ABSTRACT**

There is disclosed a panel fastener and method of attaching multiple panels. A panel fastener may include a pin and a receptacle, the pin having a head and a shank extending from the head and the receptacle having an aperture to receive the shank and a retainer configured to engage the shank to prevent the shank from being withdrawn from the aperture. The head and the receptacle may have respective openings to receive a key to disengage the retainer from the shank.
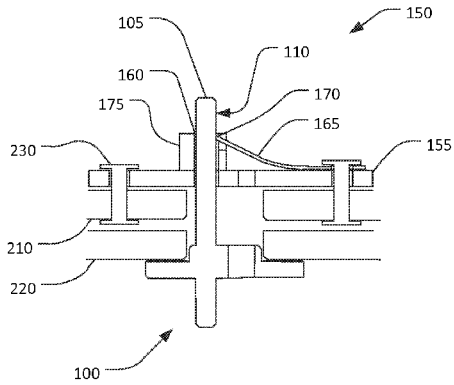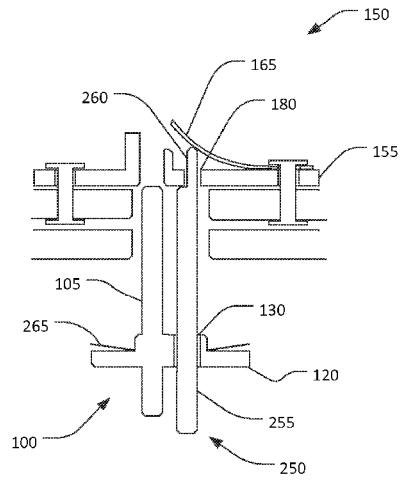
17 Claims, 7 Drawing Sheets