US009410369B2

(12) **United States Patent**
Mullet et al.

(10) **Patent No.: US 9,410,369 B2**
(45) **Date of Patent: Aug. 9, 2016**

(54) **HIGH EFFICIENCY ROLLER SHADE AND METHOD FOR SETTING ARTIFICIAL STOPS**

(71) Applicant: **QMotion Incorporated**, Pensacola, FL (US)

(72) Inventors: **Willis Jay Mullet**, Gulf Breeze, FL (US); **Yan Rodriguez**, Suwanee, GA (US); **Ben L. Garcia**, Cumming, GA (US); **Victoria Baynes Mullet**, Gulf Breeze, FL (US); **Matthew Warren Kirkland**, Cantonment, FL (US)

(73) Assignee: **The Watt Stopper, Inc.**, Santa Clara, CA (US)

(*) Notice: Subject to any disclaimer, the term of this patent is extended or adjusted under 35 U.S.C. 154(b) by 88 days.

(21) Appl. No.: **14/562,946**

(22) Filed: **Dec. 8, 2014**

(65) **Prior Publication Data**

US 2015/0090409 A1 Apr. 2, 2015

Related U.S. Application Data

(63) Continuation of application No. 14/018,823, filed on Sep. 5, 2013, now Pat. No. 8,947,027, which is a continuation of application No. 13/653,451, filed on Oct. 17, 2012, now Pat. No. 8,575,872, which is a continuation-in-part of application No. 12/711,193, filed on Feb. 23, 2010, now Pat. No. 8,368,328.

(51) **Int. Cl.**

H02P 1/00	(2006.01)
H02P 3/00	(2006.01)
H02P 5/00	(2016.01)
E06B 9/68	(2006.01)
H02P 3/08	(2006.01)
H02P 3/06	(2006.01)
E06B 9/42	(2006.01)
E06B 9/72	(2006.01)
G08C 17/02	(2006.01)
G08C 23/04	(2006.01)

(Continued)

(52) **U.S. Cl.**

CPC ... ***E06B 9/68*** (2013.01); ***E06B 9/42*** (2013.01); ***E06B 9/60*** (2013.01); ***E06B 9/62*** (2013.01); ***E06B 9/72*** (2013.01); ***G08C 17/02*** (2013.01); ***G08C 23/04*** (2013.01); ***H02P 3/06*** (2013.01); ***H02P 3/08*** (2013.01); *E06B 2009/6809* (2013.01); *E06B 2009/6818* (2013.01); *E06B 2009/6845* (2013.01); *E06B 2009/6872* (2013.01); *E06B 2009/6881* (2013.01); *G08C 2201/50* (2013.01); *G08C 2201/51* (2013.01)

(58) **Field of Classification Search**

CPC E06B 9/40; E06B 9/322
USPC 318/255, 265, 286
See application file for complete search history.

(56) **References Cited**

U.S. PATENT DOCUMENTS

3,631,659	A	1/1972	Horowitz
3,853,166	A	12/1974	Wrono

(Continued)

Primary Examiner — Erick Glass
(74) *Attorney, Agent, or Firm* — Christopher A. Proskey; BrownWinick Law Firm

(57) **ABSTRACT**

The present invention advantageously provides a motorized roller shade that includes a shade tube, a motor/controller unit and a power supply unit. The motor/controller unit is disposed within the shade tube, and includes a bearing, rotatably coupled to a support shaft, and a DC gear motor. The output shaft of the DC gear motor is coupled to the support shaft such that the output shaft and the support shaft do not rotate when the support shaft is attached to the mounting bracket.
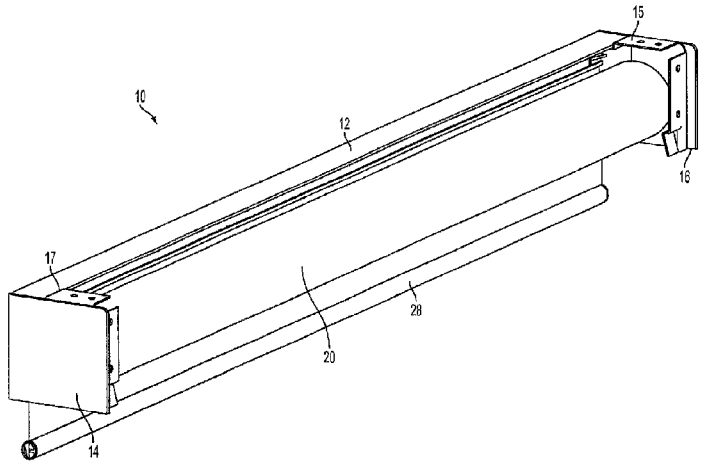
52 Claims, 31 Drawing Sheets