US007209169B2

(12) **United States Patent**
Matsumoto et al.

(10) **Patent No.: US 7,209,169 B2**
(45) **Date of Patent: Apr. 24, 2007**

(54) **IMAGING SYSTEM USING SOLID-STATE CMOS IMAGING DEVICE**

(75) Inventors: **Hiroyuki Matsumoto**, Takasaki (JP); **Takashi Takahashi**, Takasaki (JP); **Teruaki Odaka**, Mobara (JP); **Masashi Nakamura**, Chosei (JP); **Koji Shida**, Takasaki (JP)

(73) Assignees: **Renesas Technology Corp.**, Tokyo (JP); **Hitachi ULSI Systems Co., Ltd.**, Tokyo (JP)

(*) Notice: Subject to any disclaimer, the term of this patent is extended or adjusted under 35 U.S.C. 154(b) by 784 days.

(21) Appl. No.: **10/084,466**

(22) Filed: **Feb. 28, 2002**

(65) **Prior Publication Data**

US 2002/0154225 A1 Oct. 24, 2002

(30) **Foreign Application Priority Data**

Apr. 23, 2001 (JP) 2001-124367
Dec. 11, 2001 (JP) 2001-377165

(51) **Int. Cl.**
H04N 3/14 (2006.01)
H04N 9/73 (2006.01)

(52) **U.S. Cl.** **348/302**; 348/226.1

(58) **Field of Classification Search** ..... None
See application file for complete search history.

(56) **References Cited**

U.S. PATENT DOCUMENTS

6,271,884 B1 * 8/2001 Chung et al. 348/370
6,630,953 B1 * 10/2003 Toyoda et al. 348/226.1
6,710,818 B1 * 3/2004 Kasahara et al. 348/226.1
6,882,363 B1 * 4/2005 Oda et al. 348/226.1
6,900,837 B2 * 5/2005 Muramatsu et al. 348/243
2004/0201729 A1 * 10/2004 Poplin et al. 348/226.1

FOREIGN PATENT DOCUMENTS

JP 4-135382 3/1990
JP 4-94273 8/1990

OTHER PUBLICATIONS

Jed Hurwitz, Stewart G. Smith, Andrew A. Murray, Peter B. Denyer, Jim Thomson, Stuart Anderson, Ed Duncan, Andrew Kinsey, Brian Paisley, Pierre-Francois Pugibet, Eric Christison, Brian Laffoley, Mark Panaghiston, Stephen Bradshaw, Julien Vittu, Remi Brechignac and Keith M. Findlater, "A Miniature Imaging Module for Mobile Applications", 2001 IEEE International Solid-State Circuits Conference, Session 6/CMOS Image Sensors with Embedded Processors, pp. 90-91.

* cited by examiner

Primary Examiner—Tuan Ho
Assistant Examiner—Luong T. Nguyen
(74) *Attorney, Agent, or Firm*—Reed Smith LLP; Stanley P. Fisher, Esq.; Juan Carlos A. Marquez, Esq.

(57) **ABSTRACT**

Turning on and off of the light source illuminating an object to be imaged is judged based on brightness changes in small and large areas set up in the frame and an electric charge storage time for each pixel is set up to be equal to the turning-on-and-off period of the light source or an integral multiple thereof. The charge storage time is changed over responsive to the turning-on-and-off period of the light source or the integral multiple thereof to set up a stored light amount for each pixel stepwise and difference in the stored light amount between steps is interpolated by continuous gain control of read-out signals of pixels.
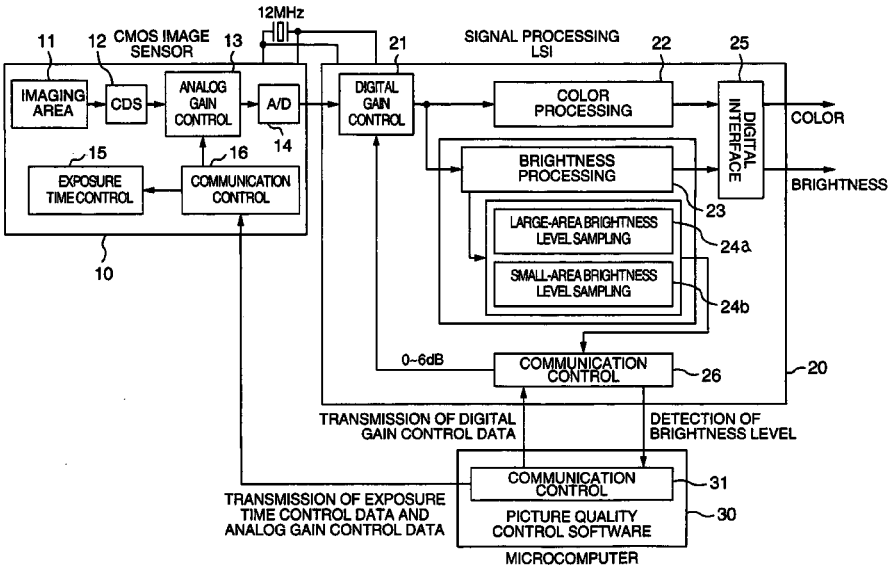
2 Claims, 12 Drawing Sheets