US007300569B2

(12) **United States Patent**
Petty

(10) **Patent No.: US 7,300,569 B2**
(45) **Date of Patent: Nov. 27, 2007**

(54) **WATER TREATMENT SYSTEM**

(75) Inventor: **Bret L. Petty**, Avon, IN (US)

(73) Assignee: **New Aqua, LLC d/b/a Agua Systems**, Avon, IN (US)

(*) Notice: Subject to any disclaimer, the term of this patent is extended or adjusted under 35 U.S.C. 154(b) by 378 days.

(21) Appl. No.: **10/842,104**

(22) Filed: **May 10, 2004**

(65) **Prior Publication Data**

US 2005/0247634 A1 Nov. 10, 2005

(51) **Int. Cl.**
B01D 15/00 (2006.01)

(52) **U.S. Cl.** **210/138**; 210/143; 210/150; 210/263; 210/269; 210/278

(58) **Field of Classification Search** 210/138, 210/143, 150, 263, 269, 278
See application file for complete search history.

(56) **References Cited**

U.S. PATENT DOCUMENTS

2,872,415	A	2/1959	Schleyer et al.
3,151,064	A	9/1964	Lathrop
3,380,590	A	4/1968	Grayson
3,465,881	A	9/1969	Rogers
3,482,604	A	12/1969	Fleckenstein et al.
3,616,820	A	11/1971	Fleckenstein
3,649,532	A	3/1972	McLean
3,779,913	A	12/1973	Martin
4,136,032	A	1/1979	Bakken et al.
4,235,718	A	11/1980	Lopez
4,290,451	A	9/1981	Fleckenstein et al.
4,313,825	A	2/1982	Fleckenstein et al.
4,430,228	A	2/1984	Paterson
4,451,361	A	5/1984	Paterson
4,659,463	A	4/1987	Chandler et al.
4,663,089	A	5/1987	Lowry et al.
4,885,084	A	12/1989	Doyle
4,966,692	A	10/1990	Overy
5,073,310	A	12/1991	Ramsey
5,080,805	A	1/1992	Houser
5,096,580	A	3/1992	Auchincloss
5,096,596	A	3/1992	Hellenbrand et al.
5,130,015	A	7/1992	Simizu et al.
5,147,530	A	9/1992	Chandler et al.
5,618,417	A	4/1997	Spindler
5,660,721	A	8/1997	Kyriss et al.
5,919,373	A	7/1999	Naaktgeboren
6,074,562	A	6/2000	Falkner
6,627,070	B1	9/2003	Frank

FOREIGN PATENT DOCUMENTS

SU	1504226	A	8/1989

OTHER PUBLICATIONS

Microclear® VI Brochure; Water Care; Jun. 1984.

(Continued)

Primary Examiner—Chester T. Barry
(74) *Attorney, Agent, or Firm*—Krieg DeVault LLP

(57) **ABSTRACT**

A water treatment system which includes a control valve with a venturi for drawing air into a tank. The passage of untreated water into the control valve draws air into a tank for oxidation of the water. The flow of the air into the tank is independent of the flow of treated water from the system.
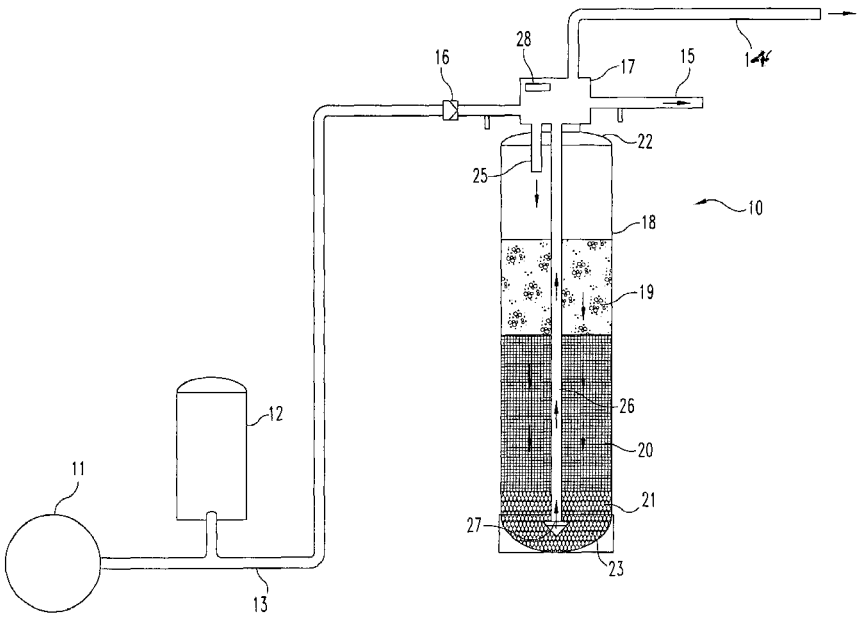
27 Claims, 10 Drawing Sheets