(No Model.) 3 Sheets—Sheet 1.

T. A. EDISON.

KINETOGRAPHIC CAMERA.

No. 589,168. Patented Aug. 31, 1897.

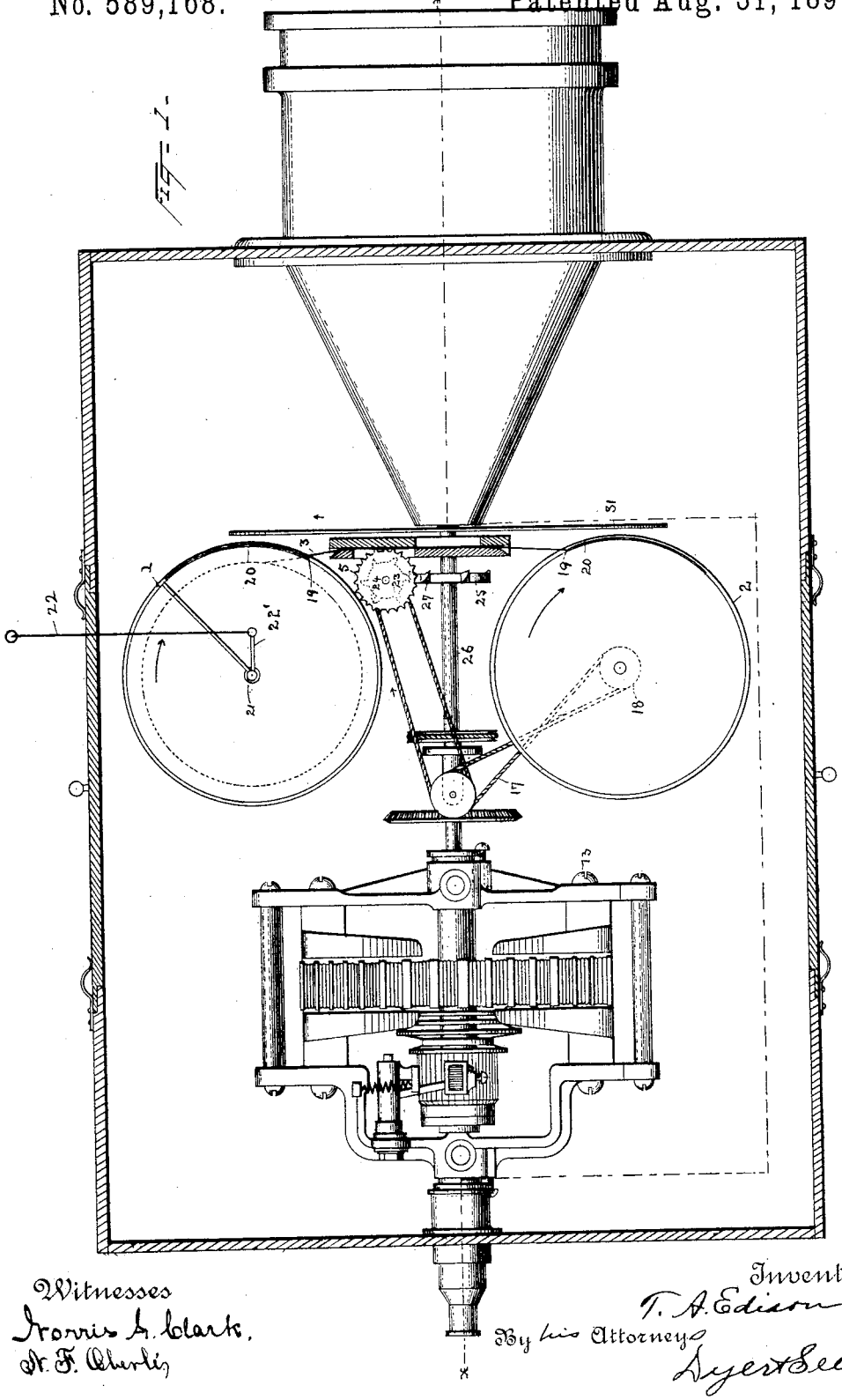

Witnesses
Morris A. Clark.
M. F. Oberlin

Inventor
T. A. Edison
By his Attorneys
Dyer & Seely

THE NORRIS PETERS CO., PHOTO-LITHO., WASHINGTON, D. C.