METHOD FOR MAKING CONTACT LENS BLANKS

Filed June 22, 1972 2 Sheets-Sheet 1

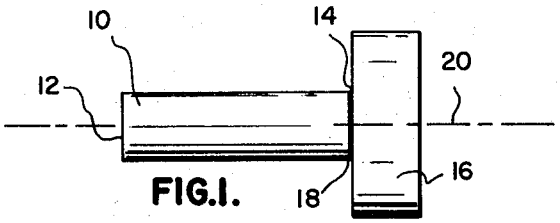

FIG.1.

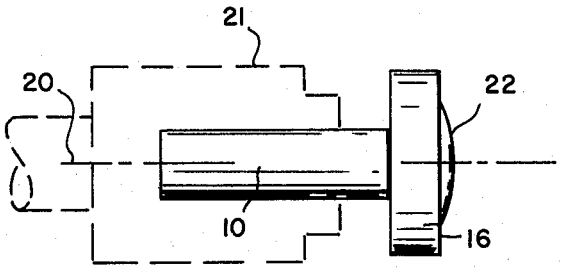

FIG.2.

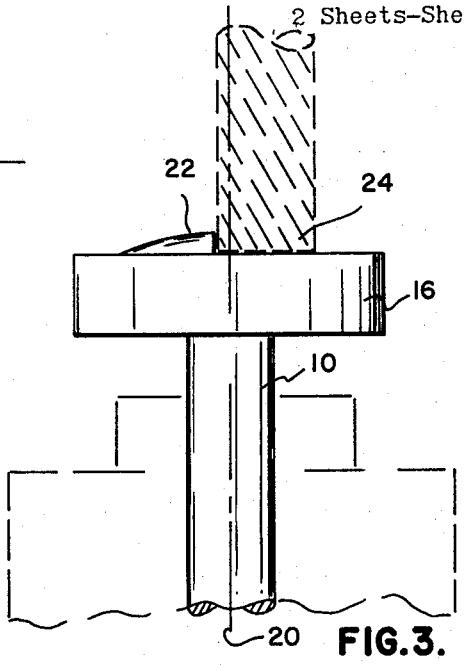

FIG.3.

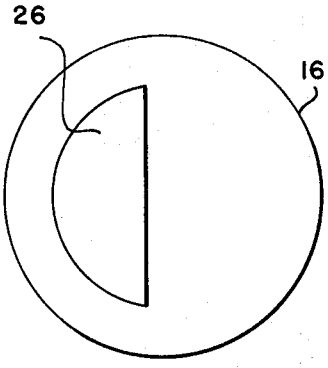

FIG.4.

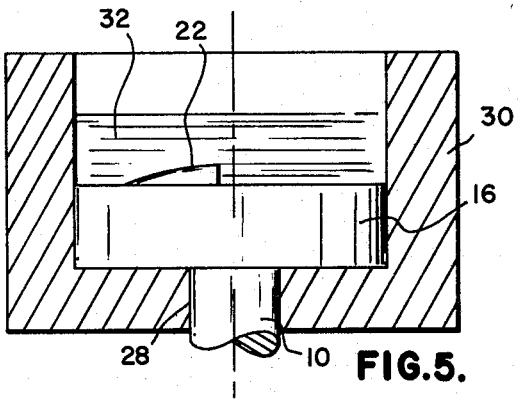

FIG.5.

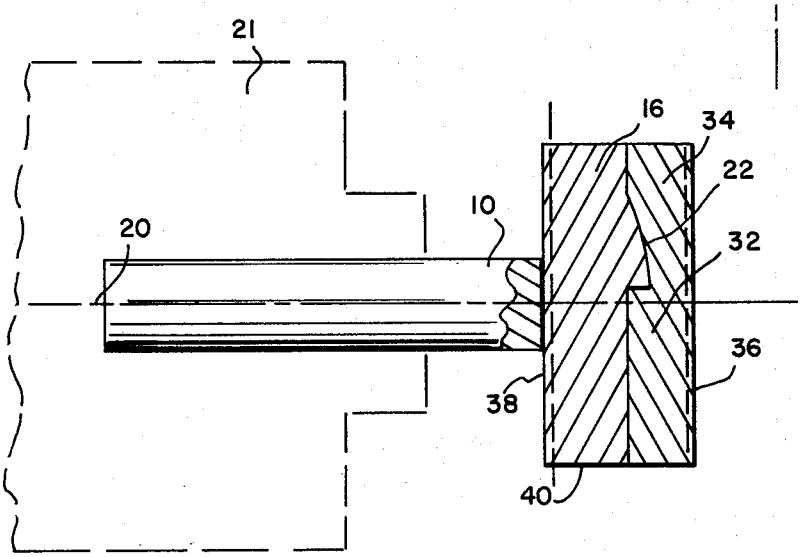

FIG.6.