June 7, 1949. E. B. DIGBY 2,472,468

MACHINE FOR AUTOMATICALLY REMOVING THE FEATHERS FROM FOWL

Filed Feb. 8, 1946 4 Sheets-Sheet 1

FIG. 1.

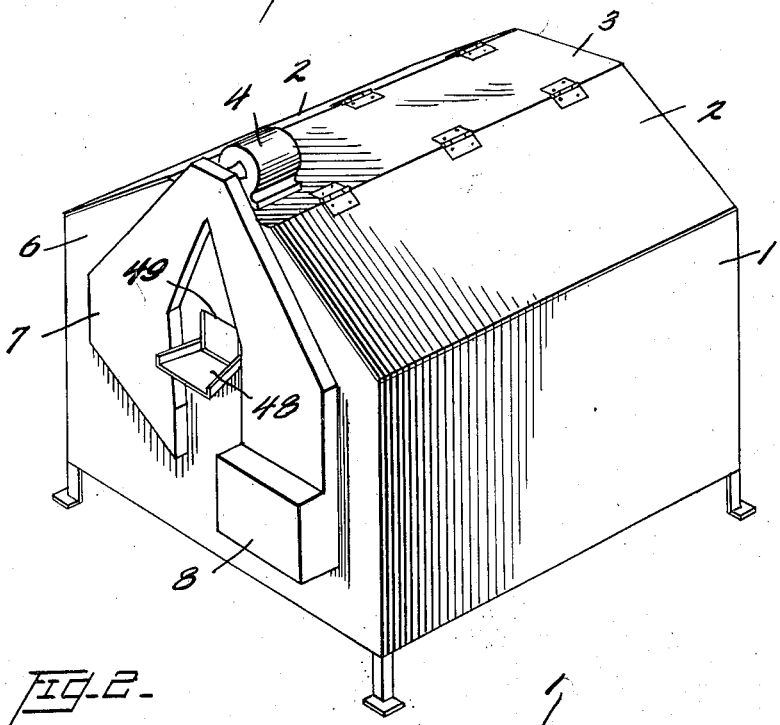

FIG. 2.

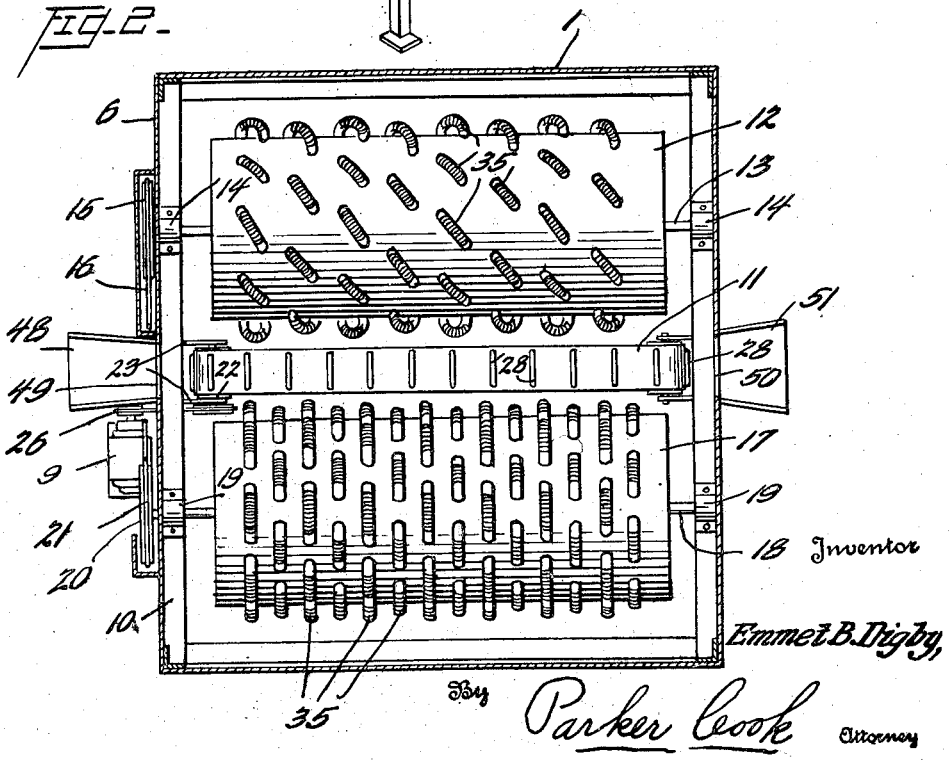

Inventor

Emmet B. Digby,

By Parker Cook Attorney