Oct. 11, 1960 W. ENGI 2,955,768

COFFEE GRINDER

Filed March 11, 1959 3 Sheets-Sheet 1

Fig. 1

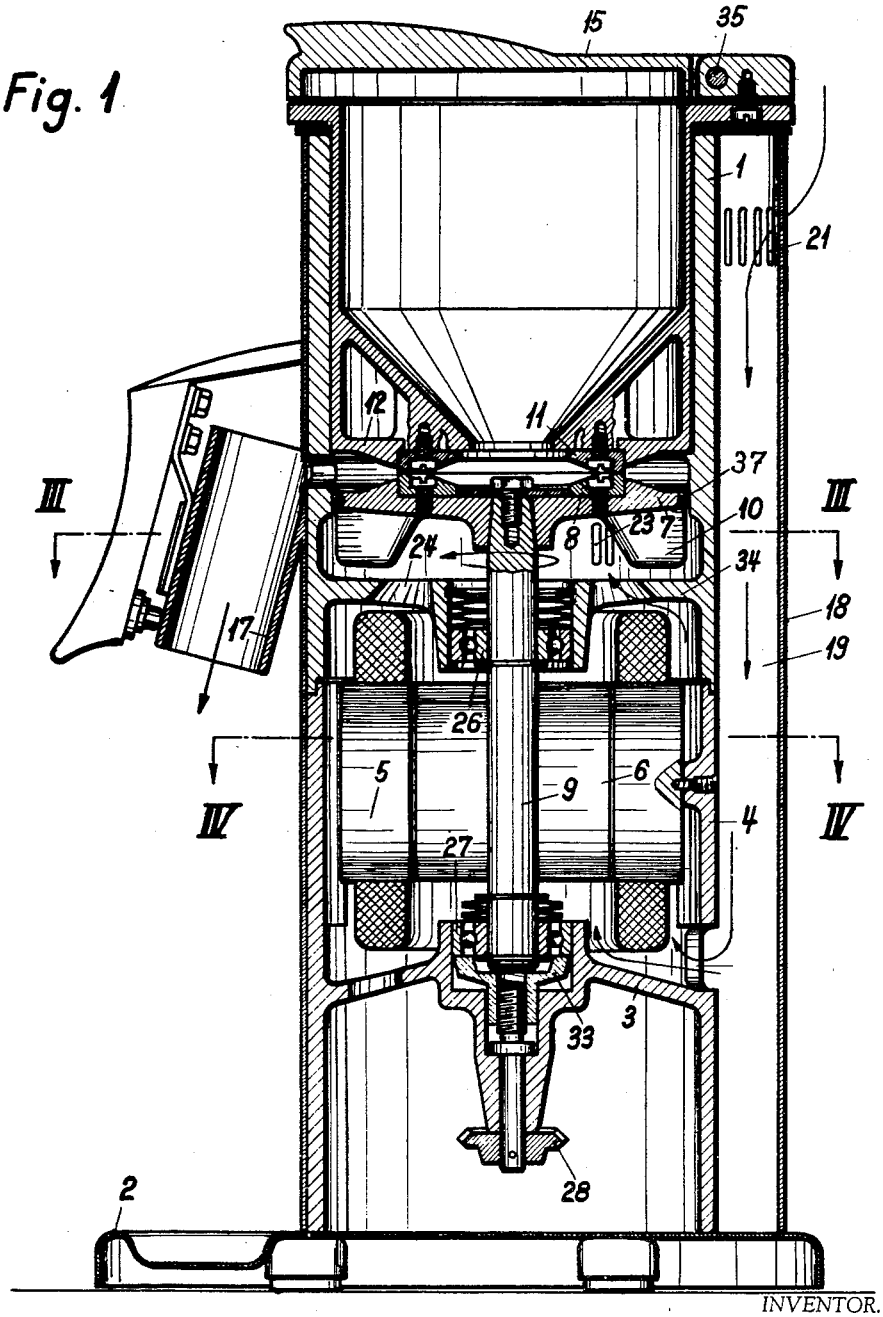

INVENTOR.
WALTER ENGI
BY Howard E. Rockenbach
ATTORNEY