US008550968B2

(12) **United States Patent**
**Sugimura et al.**

(10) **Patent No.: US 8,550,968 B2**
(45) **Date of Patent: Oct. 8, 2013**

(54) **DEVELOPING ROLLER AND IMAGING APPARATUS COMPRISING THE SAME**

(75) Inventors: **Takayuki Sugimura**, Yokohama (JP); **Kouta Kawano**, Yokohama (JP); **Takuro Sugimoto**, Yokohama (JP); **Hirotaka Tagawa**, Yokohama (JP)

(73) Assignee: **Bridgestone Corporation**, Tokyo (JP)

( * ) Notice: Subject to any disclaimer, the term of this patent is extended or adjusted under 35 U.S.C. 154(b) by 1596 days.

(21) Appl. No.: **11/594,120**

(22) Filed: **Nov. 8, 2006**

(65) **Prior Publication Data**

US 2007/0111874 A1 May 17, 2007

(30) **Foreign Application Priority Data**

Nov. 11, 2005 (JP) ..... 2005-327432
Nov. 11, 2005 (JP) ..... 2005-327439
Nov. 11, 2005 (JP) ..... 2005-327512
Nov. 11, 2005 (JP) ..... 2005-327564
Apr. 14, 2006 (JP) ..... 2006-112291

(51) **Int. Cl.**
***F16C 13/00*** (2006.01)

(52) **U.S. Cl.**
USPC ..... **492/56**; 492/53

(58) **Field of Classification Search**
USPC ..... 492/56, 53, 49
See application file for complete search history.

(56) **References Cited**

U.S. PATENT DOCUMENTS

3,629,200 A * 12/1971 Brotherton et al. ..... 528/65
3,677,983 A * 7/1972 Brotherton et al. ..... 521/160
3,950,833 A * 4/1976 Adams ..... 492/53
4,447,591 A * 5/1984 Watanabe et al. ..... 528/80
4,507,458 A * 3/1985 Shiraki et al. ..... 528/49
5,600,422 A * 2/1997 Fukami et al. ..... 399/313
5,834,116 A * 11/1998 Sawa et al. ..... 428/375
6,009,297 A * 12/1999 Maeda et al. ..... 399/302
6,035,172 A * 3/2000 Mimura et al. ..... 399/286
6,270,449 B1 * 8/2001 Hirayama ..... 492/54
6,555,210 B1 * 4/2003 Masuda et al. ..... 428/212
6,629,915 B1 * 10/2003 Ohki et al. ..... 492/54
6,685,612 B2 * 2/2004 Hirayama ..... 492/56
6,734,274 B2 * 5/2004 Suzuki et al. ..... 528/76

(Continued)

FOREIGN PATENT DOCUMENTS

CN 1203385 12/1998
CN 1261446 7/2000

(Continued)

OTHER PUBLICATIONS

Chinese Office Action dated Aug. 8, 2008 (with translation) (12 pages).

(Continued)

*Primary Examiner* — Essama Omgba
(74) *Attorney, Agent, or Firm* — Sughrue Mion, PLLC

(57) **ABSTRACT**

There is a developing roller having a low compression permanent strain without contaminating a photosensitive drum and deteriorating toners. The developing roller **1** comprises a shaft **2**, an elastic layer **3** formed on an outer periphery of the shaft **2** and a surface coating layer **4** formed on an outer peripheral face of the elastic layer **3**, in which the surface coating layer **4** comprises a urethane resin formed by crosslinking a lactone-modified polyol with a polyisocyanate. The urethane resin is preferable to be formed by crosslinking the lactone-modified polyol with two or more kinds of polyisocyanates.
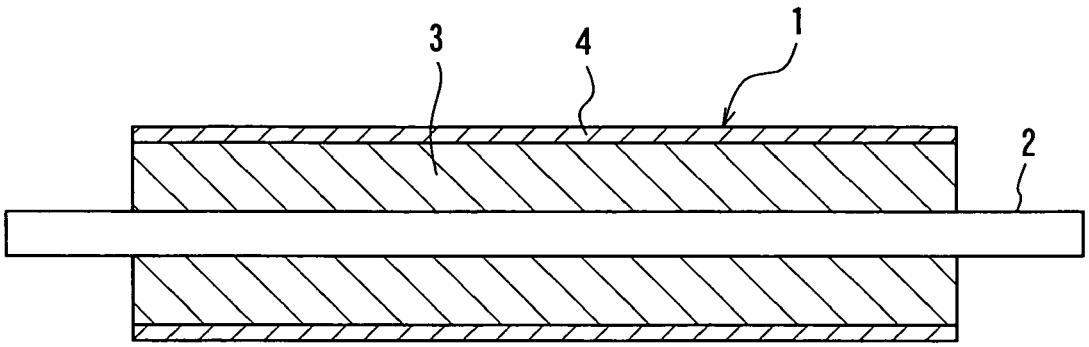
**22 Claims, 1 Drawing Sheet**