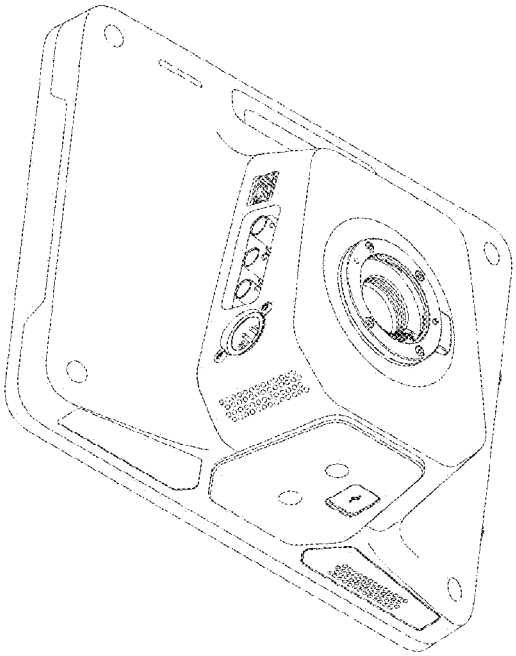

Figure 9

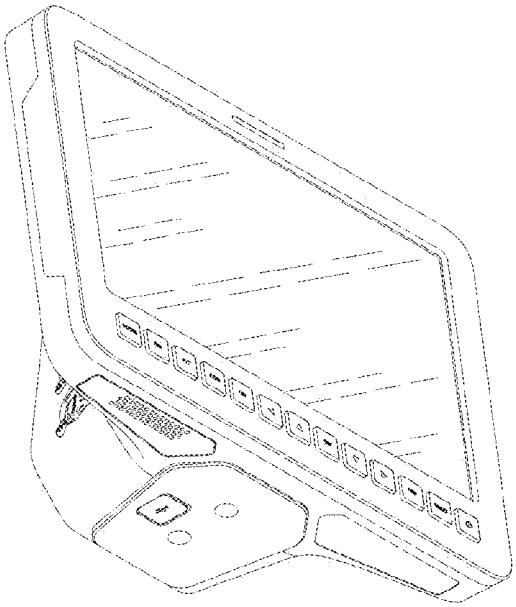

Figure 10