US00D744568S

(12) **United States Design Patent**
Petty et al.

(10) **Patent No.: US D744,568 S**
(45) **Date of Patent: ** Dec. 1, 2015**

(54) **CAMERA**

(71) Applicant: **Blackmagic Design Pty. Ltd.**, Port Melbourne VIC (AU)

(72) Inventors: **Grant Petty**, Melbourne (AU); **Simon Kidd**, Melbourne (AU); **Michael Cornish**, Melbourne (AU); **Stuart Elford**, Melbourne (AU); **Shannon Smith**, Melbourne (AU); **Ryan Harper**, Melbourne (AU); **Chee Yau Lye**, Melbourne (AU); **Joel Noble**, Melbourne (AU)

(73) Assignee: **Blackmagic Design Pty Ltd** (AU)

(**) Term: **14 Years**

(21) Appl. No.: **29/487,103**

(22) Filed: **Apr. 4, 2014**

(51) **LOC (10) Cl.** **16-01**

(52) **U.S. Cl.**
USPC **D16/202**

(58) **Field of Classification Search**
USPC D16/200, 202–206, 208, 218, 219, 242; 348/63, 373–376; 396/427, 529–532, 396/535, 539–541
CPC G03B 15/03; G03B 17/02; G03B 17/04; G03B 17/56; G03B 19/04; H04N 5/2251; H04N 5/2252; H04N 5/2253; H04N 5/2254; H04N 2101/00
See application file for complete search history.

(56) **References Cited**

U.S. PATENT DOCUMENTS

D382,578	S	*	8/1997	Cieslikowski	D16/200
6,705,774	B2	*	3/2004	Tashiro et al.	396/427
7,336,295	B2	*	2/2008	Sukenari et al.	348/63
D594,047	S	*	6/2009	Lee	D16/202
D598,038	S	*	8/2009	Takahashi	D16/217
D610,178	S	*	2/2010	Adolfsson et al.	D16/200
D627,812	S	*	11/2010	Oikawa et al.	D16/202
D627,814	S	*	11/2010	Tzeng et al.	D16/202
D643,452	S	*	8/2011	Alm et al.	D16/200
8,259,222	B2	*	9/2012	Rodriguez et al.	348/373
D674,426	S	*	1/2013	Konishi et al.	D16/202
D674,832	S	*	1/2013	Zhang	D16/202
D676,476	S	*	2/2013	Ishikura et al.	D16/202

* cited by examiner

Primary Examiner — Adir Aronovich
Assistant Examiner — Ramzi Almatrahi
(74) *Attorney, Agent, or Firm* — Saidman DesignLaw Group, LLC

(57) **CLAIM**

The ornamental design for a camera, as shown and described.

DESCRIPTION

FIG. **1** is a top front perspective view of a camera showing our new design;
FIG. **2** is a top rear perspective view thereof;
FIG. **3** is a front elevation view thereof;
FIG. **4** is a top plan view thereof;
FIG. **5** is a rear elevation view thereof;
FIG. **6** is a bottom plan view thereof;
FIG. **7** is a left side elevation view thereof;
FIG. **8** is a right side elevation view thereof;
FIG. **9** is a bottom front perspective view thereof; and,
FIG. **10** is a bottom rear perspective view thereof.
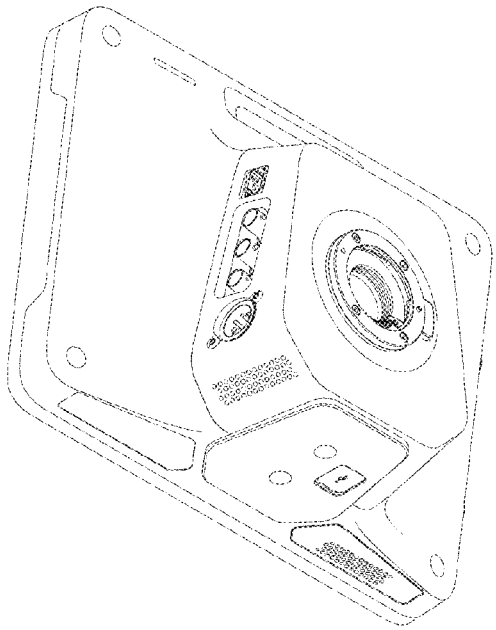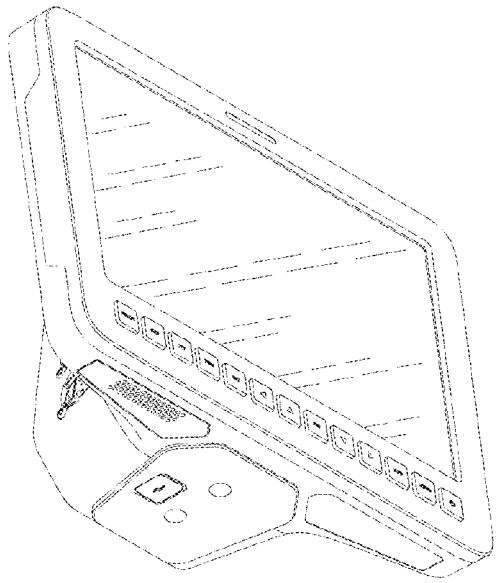
1 Claim, 5 Drawing Sheets