TROCAR AND METHOD OF TREATING BLOAT

Filed Jan. 7, 1959 2 Sheets-Sheet 1

FIG_1a

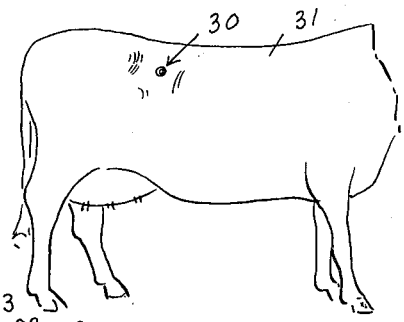


FIG_1

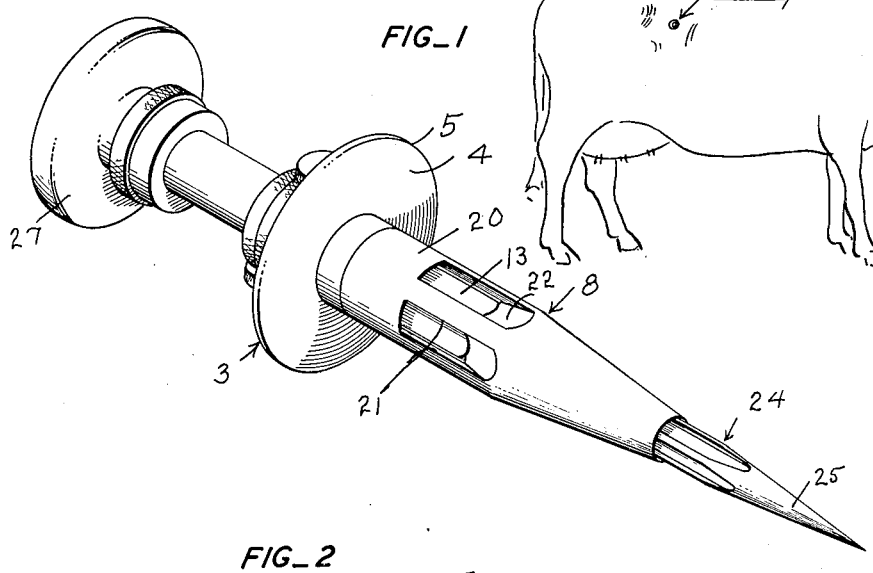


FIG_2

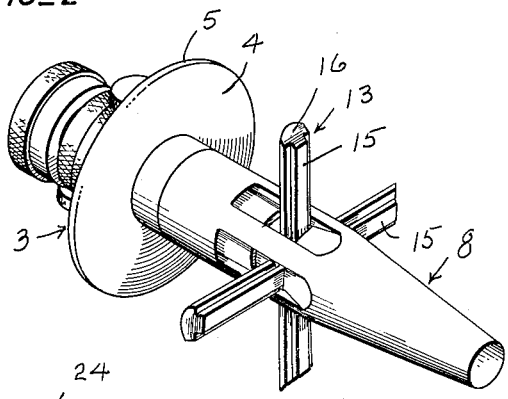


FIG_3

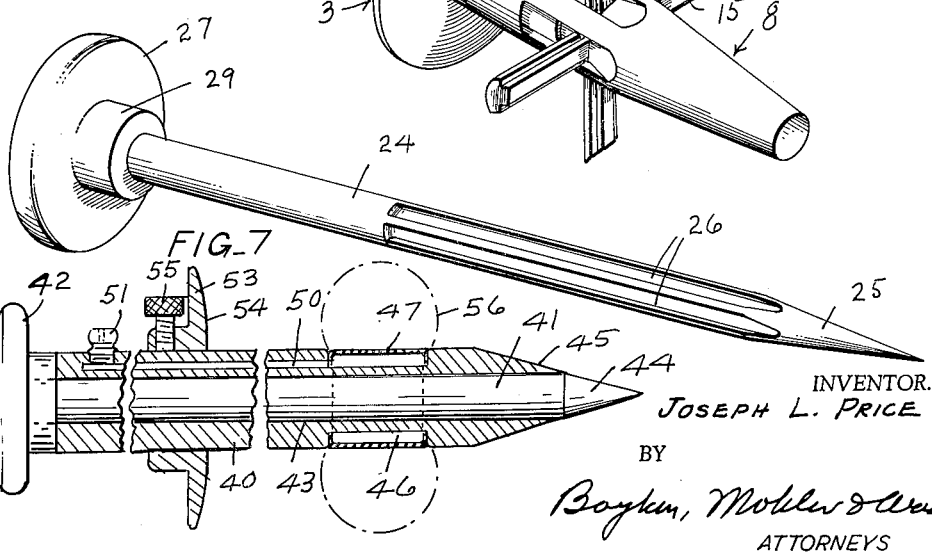


FIG_7




INVENTOR.
JOSEPH L. PRICE
BY
Boykin, Mobley & Wood
ATTORNEYS