US009636068B2

(12) **United States Patent**
Yee et al.

(10) **Patent No.: US 9,636,068 B2**
(45) **Date of Patent: May 2, 2017**

(54) **ANALYTE SENSOR AND APPARATUS FOR INSERTION OF THE SENSOR**

(71) Applicant: **ABBOTT DIABETES CARE INC.**, Alameda, CA (US)

(72) Inventors: **Phillip Yee**, San Francisco, CA (US); **Christopher A. Thomas**, San Leandro, CA (US); **Udo Hoss**, Castro Valley, CA (US); **Lei He**, Moraga, CA (US); **Michael R. Love**, Pleasanton, CA (US)

(73) Assignee: **ABBOTT DIABETES CARE INC.**, Alameda, CA (US)

(*) Notice: Subject to any disclaimer, the term of this patent is extended or adjusted under 35 U.S.C. 154(b) by 0 days.

(21) Appl. No.: **15/192,531**

(22) Filed: **Jun. 24, 2016**

(65) **Prior Publication Data**

US 2017/0020458 A1 Jan. 26, 2017

Related U.S. Application Data

(63) Continuation of application No. 12/698,129, filed on Feb. 1, 2010, now Pat. No. 9,402,544.

(60) Provisional application No. 61/149,639, filed on Feb. 3, 2009.

(51) **Int. Cl.**

A61B 5/00	(2006.01)
A61B 5/145	(2006.01)
A61M 5/158	(2006.01)
A61B 5/1486	(2006.01)

(52) **U.S. Cl.**

CPC ***A61B 5/6849*** (2013.01); ***A61B 5/0022*** (2013.01); ***A61B 5/14503*** (2013.01); ***A61B 5/14532*** (2013.01); ***A61B 5/14865*** (2013.01); ***A61B 5/742*** (2013.01); ***A61M 5/158*** (2013.01); *A61B 2560/0214* (2013.01); *A61B 2560/0412* (2013.01)

(58) **Field of Classification Search**

CPC A61B 5/6849; A61B 5/14532

See application file for complete search history.

(56) **References Cited**

U.S. PATENT DOCUMENTS

3,123,790	A	3/1964	Tyler
3,260,656	A	7/1966	Ross, Jr.
3,522,807	A	8/1970	Millenbach
3,581,062	A	5/1971	Aston
3,653,841	A	4/1972	Klein
3,670,727	A	6/1972	Reiterman
3,719,564	A	3/1973	Lilly, Jr. et al.
3,776,832	A	12/1973	Oswin et al.
3,837,339	A	9/1974	Aisenberg et al.
3,926,760	A	12/1975	Allen et al.

(Continued)

FOREIGN PATENT DOCUMENTS

CA	2291105	12/1998
DE	4401400	7/1995

(Continued)

OTHER PUBLICATIONS

Aussedat, B., et al., "A User-Friendly Method for Calibrating a Subcutaneous Glucose Sensor-Based Hypoglycemic Alarm", Biosensors & Bioelectronics, vol. 12, No. 11, 1997, pp. 1061-1071.

(Continued)

Primary Examiner — Christian Jang
(74) *Attorney, Agent, or Firm* — One LLP

(57) **ABSTRACT**

An apparatus for insertion of a medical device in the skin of a subject is provided.
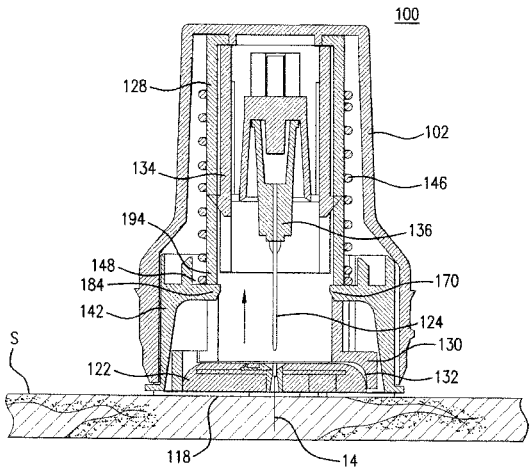
19 Claims, 29 Drawing Sheets