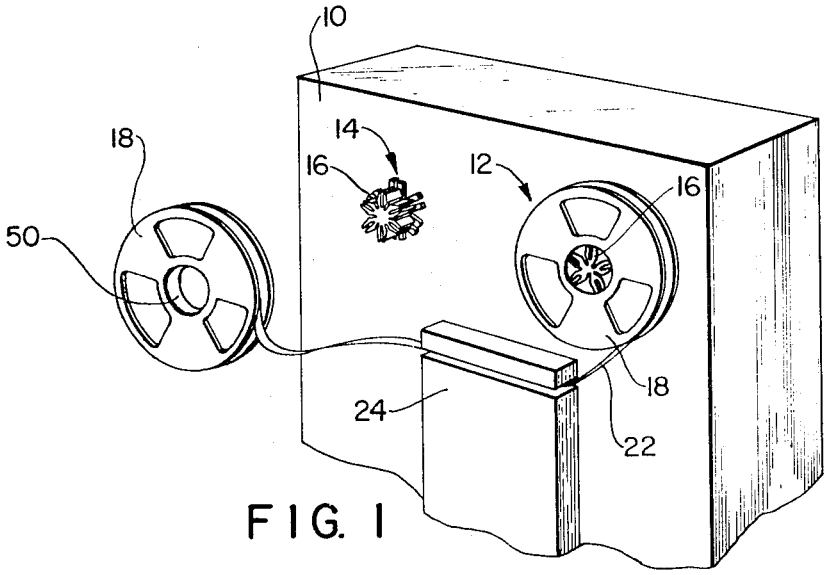

FIG. 1

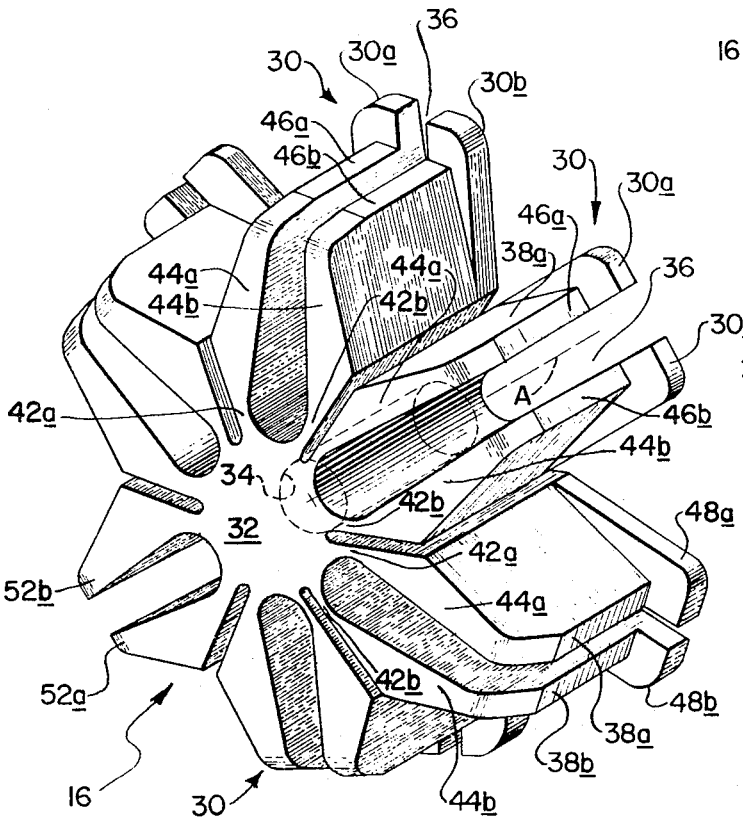

FIG. 2

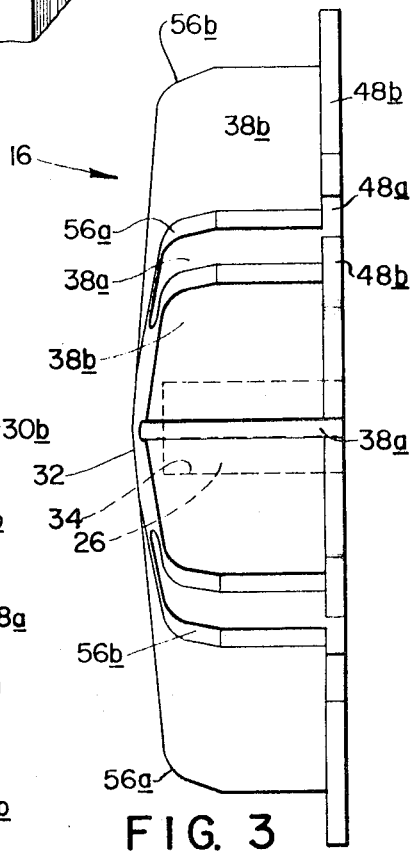

FIG. 3

INVENTOR.
JOSEPH ST. AMOUR
BY

Blair Cesari & St. Onge
ATTORNEYS