US006914968B1

(12) **United States Patent**
Ryley et al.

(10) **Patent No.: US 6,914,968 B1**
(45) **Date of Patent: Jul. 5, 2005**

(54) **METHOD AND APPARATUS FOR TELEPHONE CALL FRAUD DETECTION AND PREVENTION**

(75) Inventors: **Gordon Bradley Ryley**, Calgary (CA); **Sheldon Dean McCullough**, Delta (CA)

(73) Assignee: **VTech Communications, Ltd.**, Tai Po (HK)

(*) Notice: Subject to any disclaimer, the term of this patent is extended or adjusted under 35 U.S.C. 154(b) by 733 days.

(21) Appl. No.: **09/628,147**

(22) Filed: **Jul. 28, 2000**

(30) **Foreign Application Priority Data**

Aug. 5, 1999 (CA) 2279684

(51) **Int. Cl.**[7] **H04M 3/00**

(52) **U.S. Cl.** **379/188**; 379/7; 379/35; 379/199; 379/200

(58) **Field of Search** 379/7, 22.03, 29.08, 379/114.14, 127.02, 140, 145, 155, 188, 189, 194, 195, 200, 399.01, 32.01, 32.04, 35, 199

(56) **References Cited**

U.S. PATENT DOCUMENTS

3,899,640	A	*	8/1975	Piacente et al.	379/200
4,085,302	A		4/1978	Zenk et al.	
4,313,108	A		1/1982	Yoshida	
4,816,811	A		3/1989	Bogatin et al.	
4,885,767	A	*	12/1989	Therrien	379/189
4,885,768	A	*	12/1989	Genin	379/200
4,901,074	A		2/1990	Sinn et al.	
4,937,854	A	*	6/1990	Sarakas	379/199
4,953,202	A	*	8/1990	Newell	379/200
4,989,239	A	*	1/1991	McGarry	379/145
5,003,586	A	*	3/1991	Wright	379/200
5,086,459	A	*	2/1992	Perry	379/200
5,418,760	A		5/1995	Kawashima et al.	
5,436,959	A	*	7/1995	Dake et al.	379/7
5,559,874	A	*	9/1996	Panosh	379/189
5,572,573	A		11/1996	Sylvan et al.	
5,584,054	A		12/1996	Tyneski et al.	
5,613,137	A		3/1997	Bertram et al.	
5,674,018	A		10/1997	Kaufman et al.	
5,742,894	A		4/1998	Jambhekar et al.	
5,805,686	A		9/1998	Moller et al.	
5,809,125	A		9/1998	Gammino	
5,818,924	A		10/1998	King et al.	

(Continued)

FOREIGN PATENT DOCUMENTS

CA	2116462		4/1995	
CA	2236086		12/1998	
EP	0 239 455		3/1987	H04M/1/66
EP	0 813 328		12/1997	
GB	2274043		7/1994	H04M/1/66
JP	402137566 A	*	11/1988	
JP	1091305		4/1989	
WO	WO 97/41677		11/1997	

Primary Examiner—Bing Q. Bui
(74) *Attorney, Agent, or Firm*—Pillsbury Winthrop Shaw Pittman LLP

(57) **ABSTRACT**

The present disclosure discloses a method and apparatus for detecting and preventing telephone call fraud. The call fraud detector apparatus is connected to the telephone line, and includes a telephone line interface with switch hook. A parallel set detector indicates to the microcontroller that another device has gone off hook on the telephone line. The microcontroller causes the telephone line interface switch hook to also go off hook in parallel, thereby preventing pulse dialing by the other device. The device may also include a DTMF tone detector and generator to prevent DTMF dialing on the telephone line. The call fraud detector can provide a visual, audible, and/or tactile indication when unauthorized use of the telephone line occurs, and can be enabled or disabled by an external device. The call fraud detector can log the time and date of each unauthorized call placed on a line, and can also notify the telephone service provider when an unauthorized call is attempted.
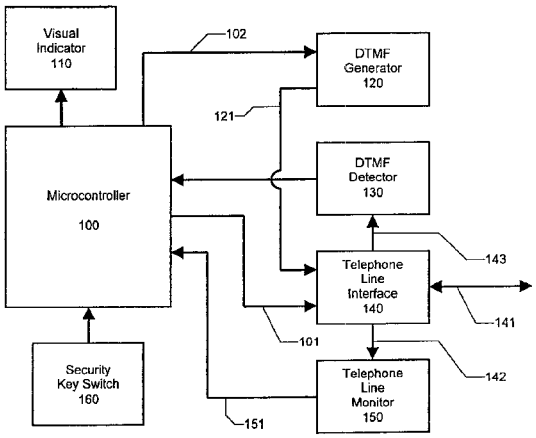
17 Claims, 3 Drawing Sheets