US009411368B2

(12) **United States Patent**
Sip

(10) **Patent No.: US 9,411,368 B2**
(45) **Date of Patent: Aug. 9, 2016**

(54) **EXTERNAL MODULE, ELECTRONIC DEVICE AND METHOD FOR DRIVING EXTERNAL MODULE**

(75) Inventor: **Kim Yeung Sip**, New Taipei (TW)

(73) Assignee: **Acer Incorporated**, New Taipei (TW)

(*) Notice: Subject to any disclaimer, the term of this patent is extended or adjusted under 35 U.S.C. 154(b) by 1085 days.

(21) Appl. No.: **13/528,834**

(22) Filed: **Jun. 21, 2012**

(65) **Prior Publication Data**

US 2013/0057066 A1 Mar. 7, 2013

(30) **Foreign Application Priority Data**

Sep. 6, 2011 (TW) ..... 100132135 A

(51) **Int. Cl.**
G06F 1/16 (2006.01)

(52) **U.S. Cl.**
CPC ***G06F 1/1632*** (2013.01); ***G06F 1/16*** (2013.01); *Y10T 307/25* (2015.04)

(58) **Field of Classification Search**
CPC G06F 1/1632; G06F 1/16; Y10T 307/25
USPC 307/112–113, 149; 439/639
See application file for complete search history.

(56) **References Cited**

U.S. PATENT DOCUMENTS

4,905,230 A * 2/1990 Madge et al. 370/222
5,359,540 A * 10/1994 Ortiz 700/295
6,435,904 B1 * 8/2002 Herbst et al. 439/534
6,786,743 B2 * 9/2004 Huang 439/131
7,066,767 B2 * 6/2006 Liao H01R 27/02 439/13
7,121,852 B2 * 10/2006 Ng et al. 439/131
7,255,582 B1 * 8/2007 Liao 439/165
7,494,349 B1 * 2/2009 Huang H01R 27/00 439/131
7,540,748 B2 * 6/2009 Tracy G01R 1/1616 439/131
7,679,901 B2 * 3/2010 Lin G06F 1/1616 312/223.1
7,811,102 B2 * 10/2010 Lai G06F 1/1616 361/679.55
7,899,970 B2 * 3/2011 Mori 710/313
7,909,624 B2 * 3/2011 Iida 439/131
8,500,492 B2 * 8/2013 Brown et al. 439/638
2003/0177294 A1 * 9/2003 Russell 710/62
2008/0194119 A1 * 8/2008 Mori 439/13
2008/0200064 A1 * 8/2008 Chong et al. 439/571
2008/0268678 A1 * 10/2008 Hsu 439/131
2010/0013580 A1 * 1/2010 Parker et al. 335/167
2010/0165569 A1 * 7/2010 Lai G06F 1/1616 361/679.55
2011/0062780 A1 * 3/2011 Verges et al. 307/38
2011/0244728 A1 * 10/2011 Chang et al. 439/628
2011/0264828 A1 * 10/2011 Zeung et al. 710/16
2012/0042099 A1 * 2/2012 Wong et al. 710/9

* cited by examiner

Primary Examiner — Adi Amrany
(74) *Attorney, Agent, or Firm* — Jianq Chyun IP Office

(57) **ABSTRACT**

An external module, an electronic device and a method for driving an electronic module are provided. The electronic device includes a host and multiple external modules. The external module adapted to be removably connected to the electronic device includes a body, a first connector, a moving assembly and a second connector. The body has multiple connecting ports. The first connector is fixed on one of the connecting ports. The electronic device is adapted to be electrically connected to the first connector for providing power to the external module to drive the moving assembly. The second connector is assembled to the moving assembly disposed in the body and electrically connected to the first connector. The moving assembly drives the second connector to switch between the connecting ports, and the connecting port where the second connector is located is different from the connecting port where the first connector is located.
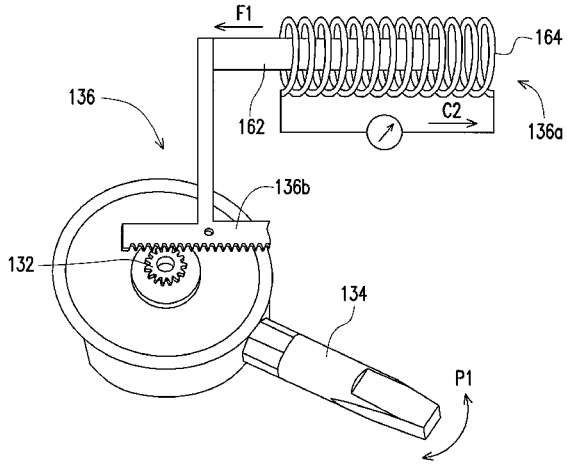
16 Claims, 4 Drawing Sheets