US009410868B2

(12) **United States Patent**
Ward, Jr. et al.

(10) **Patent No.: US 9,410,868 B2**
(45) **Date of Patent: Aug. 9, 2016**

(54) **METHODS FOR PRODUCING STRAIN SENSORS ON TURBINE COMPONENTS**

(71) Applicant: **General Electric Company**, Schenectady, NY (US)

(72) Inventors: **John David Ward, Jr.**, Woodruff, SC (US); **Christopher Edward Thompson**, Greenville, SC (US); **Bryan Joseph Germann**, Greenville, SC (US); **Jason Lee Burnside**, Greenville, SC (US); **Gregory Lee Hovis**, Martinez, GA (US)

(73) Assignee: **General Electric Company**, Schenectady, NY (US)

(*) Notice: Subject to any disclaimer, the term of this patent is extended or adjusted under 35 U.S.C. 154(b) by 167 days.

(21) Appl. No.: **14/292,015**

(22) Filed: **May 30, 2014**

(65) **Prior Publication Data**

US 2015/0346058 A1 Dec. 3, 2015

(51) **Int. Cl.**

G01M 15/14	(2006.01)
B23K 26/36	(2014.01)
B23K 26/40	(2014.01)
C04B 35/486	(2006.01)
C04B 35/64	(2006.01)
G01L 5/00	(2006.01)
G01M 5/00	(2006.01)
G01M 11/08	(2006.01)
G01B 11/16	(2006.01)
F01D 17/04	(2006.01)

(52) **U.S. Cl.**

CPC ***G01M 15/14*** (2013.01); ***B23K 26/365*** (2013.01); ***B23K 26/408*** (2013.01); ***C04B 35/486*** (2013.01); ***C04B 35/64*** (2013.01); ***F01D 17/04*** (2013.01); ***G01B 11/165*** (2013.01); ***G01L 5/00*** (2013.01); ***G01M 5/0016*** (2013.01); ***G01M 5/0041*** (2013.01); ***G01M 11/081*** (2013.01); *F05D 2230/13* (2013.01); *F05D 2230/31* (2013.01); *F05D 2300/2118* (2013.01)

(58) **Field of Classification Search**

CPC C04B 35/486; G01M 5/0041; G01M 11/081; G01M 15/14; G01M 5/0016; G01M 5/0033; B23K 2203/52; B23K 26/264; G01L 5/00

USPC 73/112.01

See application file for complete search history.

(56) **References Cited**

U.S. PATENT DOCUMENTS

4,227,842	A	10/1980	Samanta et al.
4,323,325	A	4/1982	Samanta et al.

(Continued)

FOREIGN PATENT DOCUMENTS

EP	0009859	B1	11/1984
EP	2481602	A1	8/2012
WO	2013075202	A1	5/2013

OTHER PUBLICATIONS

PCT Search Report and Written Opinion issued in connection with corresponding Application No. PCT/US2015/031289 on Aug. 6, 2015.

Primary Examiner — Freddie Kirkland, III

(74) *Attorney, Agent, or Firm* — Ernest G. Cusick; Frank A. Landgraff

(57) **ABSTRACT**

Methods for manufacturing strain sensors on turbine components include providing a turbine component comprising an exterior surface, depositing a ceramic material onto a portion of the exterior surface, and ablating at least a portion of the ceramic material to form a strain sensor comprising at least two reference points.
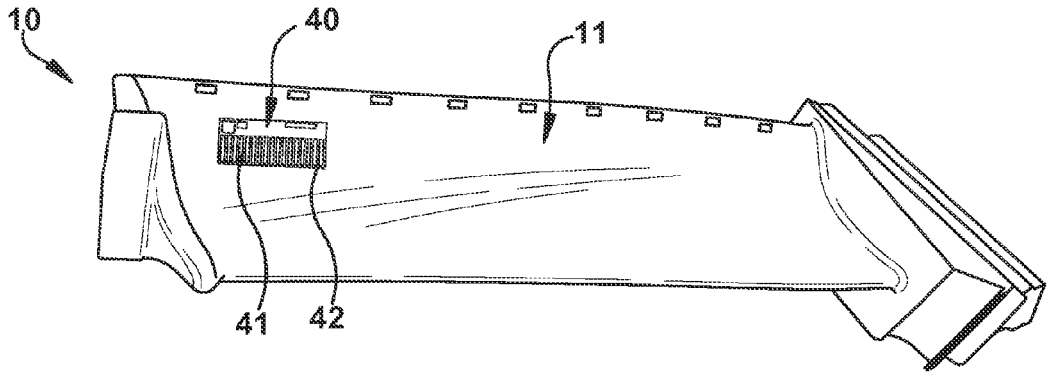
16 Claims, 3 Drawing Sheets