US009410568B2

(12) **United States Patent**
O'Brien

(10) **Patent No.: US 9,410,568 B2**
(45) **Date of Patent: Aug. 9, 2016**

(54) **RAIL ATTACHMENT DEVICE**

(71) Applicant: **Daniel K. O'Brien**, Hudson, WI (US)

(72) Inventor: **Daniel K. O'Brien**, Hudson, WI (US)

(*) Notice: Subject to any disclaimer, the term of this patent is extended or adjusted under 35 U.S.C. 154(b) by 27 days.

(21) Appl. No.: **14/591,451**

(22) Filed: **Jan. 7, 2015**

(65) **Prior Publication Data**

US 2016/0195121 A1 Jul. 7, 2016

(51) **Int. Cl.**
F16B 12/14 (2006.01)

(52) **U.S. Cl.**
CPC ***F16B 12/14*** (2013.01); *F16B 2012/145* (2013.01)

(58) **Field of Classification Search**
CPC F16B 12/14; F16B 12/18; F16B 12/20; F16B 12/32; F16B 12/2009; F16B 12/2027; F16B 12/2036; F16B 12/2054; F16B 12/2063; Y10T 403/4602; Y10T 403/4642
See application file for complete search history.

(56) **References Cited**

U.S. PATENT DOCUMENTS

4,047,822 A * 9/1977 Lehmann F16B 12/2036 403/187
4,116,573 A * 9/1978 Fuchs F16B 5/0607 403/187
4,341,485 A * 7/1982 Appleby F16B 12/2063 403/231
4,487,522 A * 12/1984 Appleby F16B 12/2063 403/231
4,826,345 A * 5/1989 Salice F16B 12/2063 403/231
4,957,386 A * 9/1990 Harley F16B 12/2063 403/231
8,992,114 B2 * 3/2015 Ajanovic F16B 12/2063 403/231

FOREIGN PATENT DOCUMENTS

DE 4039806 A1 * 6/1992 ..... F16B 7/0446

* cited by examiner

Primary Examiner — Daniel Wiley

(74) *Attorney, Agent, or Firm* — Nikolai & Mersereau PA; Thomas J. Nikolai

(57) **ABSTRACT**

A strong and repeatedly adjustable butt joint is provided between two members using an apparatus comprising an elongate connecting screw extending from one of the two members to be joined and through a through hole and into an access opening of the other of the two members to be joined. Positioned within the access opening is a lock comprising a housing, wedge and drive screw. The drive screw moves and then holds the wedge in a locked position capturing the connecting screw to create the butt joint.
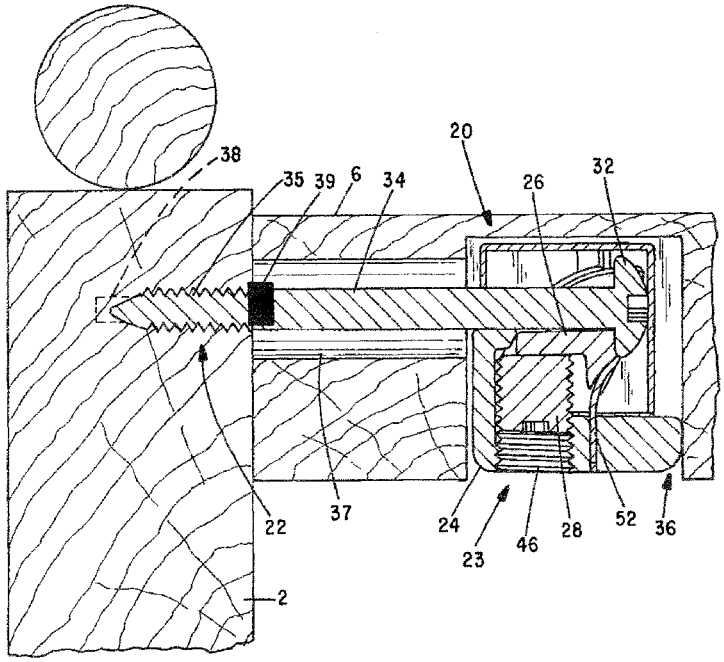
10 Claims, 8 Drawing Sheets