US009409768B2

(12) **United States Patent**
DeNatale et al.

(10) **Patent No.: US 9,409,768 B2**
(45) **Date of Patent: Aug. 9, 2016**

(54) **MEMS DEVICE WITH INTEGRATED TEMPERATURE STABILIZATION**

(71) Applicant: **Teledyne Scientific & Imaging, LLC**, Thousand Oaks, CA (US)

(72) Inventors: **Jeffrey F. DeNatale**, Thousand Oaks, CA (US); **Philip A. Stupar**, Oxnard, CA (US)

(73) Assignee: **Teledyne Scientific & Imaging, LLC**, Thousand Oaks, CA (US)

(*) Notice: Subject to any disclaimer, the term of this patent is extended or adjusted under 35 U.S.C. 154(b) by 98 days.

(21) Appl. No.: **14/065,310**

(22) Filed: **Oct. 28, 2013**

(65) **Prior Publication Data**

US 2015/0115377 A1 Apr. 30, 2015

(51) **Int. Cl.**

B81B 7/00 (2006.01)
B81C 1/00 (2006.01)
G01C 19/5712 (2012.01)

(52) **U.S. Cl.**

CPC ***B81B 7/0096*** (2013.01); ***B81C 1/00269*** (2013.01); ***G01C 19/5712*** (2013.01); *B81B 7/0032* (2013.01); *B81B 7/0087* (2013.01); *B81B 2201/0242* (2013.01); *B81C 1/00301* (2013.01); *B81C 2203/0109* (2013.01)

(58) **Field of Classification Search**

CPC B81B 7/0096; B81B 7/0087
See application file for complete search history.

(56) **References Cited**

U.S. PATENT DOCUMENTS

6,232,150 B1 * 5/2001 Lin B81C 1/00269 438/119
7,196,405 B1 * 3/2007 Ferreiro H03H 9/1014 257/659
7,267,005 B1 * 9/2007 Kranz G01C 19/5719 73/504.12
7,679,171 B2 * 3/2010 Anderson F16F 1/18 257/698
2004/0055380 A1 * 3/2004 Shcheglov G01C 19/5684 73/504.12
2004/0055381 A1 3/2004 Shcheglov et al.
2006/0196266 A1 * 9/2006 Holt G01C 19/5719 73/504.02
2007/0290282 A1 * 12/2007 Belov H01F 7/066 257/421
2009/0002961 A1 * 1/2009 Camacho H01L 23/047 361/760
2009/0085191 A1 * 4/2009 Najafi B81B 7/0058 257/698
2010/0300201 A1 * 12/2010 Ge B81B 7/0048 73/504.12
2010/0315179 A1 * 12/2010 Schoepf H03H 9/02448 333/186
2012/0280594 A1 * 11/2012 Chen ..... H03H 3/007 310/313 R
2013/0001765 A1 * 1/2013 Yaralioglu H01L 23/345 257/704
2014/0361844 A1 * 12/2014 Quevy H03B 5/30 331/70

* cited by examiner

Primary Examiner — Michael Lebentritt
Assistant Examiner — Jordan Klein
(74) *Attorney, Agent, or Firm* — Snell & Wilmer LLP

(57) **ABSTRACT**

An apparatus for providing localized heating as well as protection for a vibrating MEMS device. A cap over a MEMS gyroscope includes an embedded temperature sensor and a heater. The temperature sensor is a trace made of a material with a known temperature/resistance coefficient, which loops back along itself to reduce electromagnetic interference. The heater is a resistive metal trace which also loops back along itself. The temperature sensor and the heater provide localized temperature stabilization for the MEMS gyroscope to reduce temperature drift in the MEMS gyroscope.
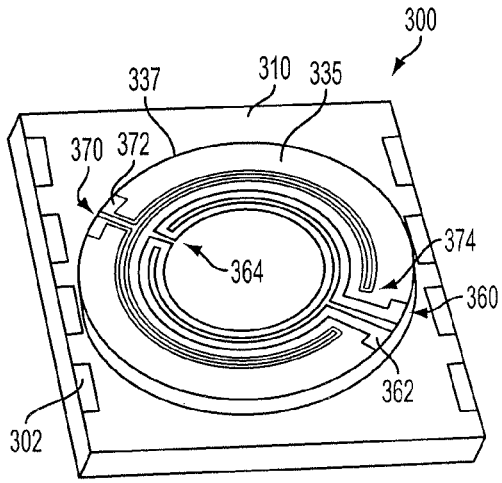
19 Claims, 9 Drawing Sheets