US009408768B1

(12) **United States Patent**
Hunter, Jr.

(10) **Patent No.: US 9,408,768 B1**
(45) **Date of Patent: *Aug. 9, 2016**

(54) **ARM STABILIZER FOR ELBOW SURGICAL PROCEDURE**

(76) Inventor: **Alton Lee Hunter, Jr.**, Columbia, TN (US)

(*) Notice: Subject to any disclaimer, the term of this patent is extended or adjusted under 35 U.S.C. 154(b) by 0 days.

This patent is subject to a terminal disclaimer.

(21) Appl. No.: **13/558,213**

(22) Filed: **Jul. 25, 2012**

Related U.S. Application Data

(63) Continuation of application No. 12/550,701, filed on Aug. 31, 2009, now Pat. No. 8,230,864.

(51) **Int. Cl.**
A61G 13/12 (2006.01)

(52) **U.S. Cl.**
CPC ***A61G 13/12*** (2013.01)

(58) **Field of Classification Search**
USPC 128/845–846, 877–879; 602/20–23, 5, 602/13, 36; 600/485, 490, 500; 5/623–624, 5/648, 646, 650–651, 658
See application file for complete search history.

(56) **References Cited**

U.S. PATENT DOCUMENTS

473,200	A	4/1892	Streeter	
5,537,702	A *	7/1996	Brown-Milants et al.	5/632
5,785,057	A	7/1998	Fischer	
5,884,974	A *	3/1999	Bergsten et al.	297/411.35
5,904,655	A	5/1999	Brackett	
5,961,512	A *	10/1999	Purnell	606/1
7,017,215	B1	3/2006	Singer et al.	
7,143,458	B2	12/2006	Slater, Jr.	
7,441,293	B1	10/2008	Singer et al.	
8,230,864	B2 *	7/2012	Hunter, Jr.	128/845
8,273,043	B2 *	9/2012	Bonutti	A61F 5/013 602/23
8,356,601	B2	1/2013	Hunter, Jr.	
2002/0128577	A1 *	9/2002	Smart	602/36
2005/0251076	A1	11/2005	Branch	
2008/0034502	A1	2/2008	Copeland	
2008/0172791	A1	7/2008	Walczyk	
2008/0301878	A1	12/2008	Elhabashy	
2011/0048428	A1	3/2011	Hunter, Jr.	
2012/0103344	A1	5/2012	Hunter, Jr.	

* cited by examiner

Primary Examiner — Ophelia A Hawthorne
(74) *Attorney, Agent, or Firm* — Waller Lansden Dortch & Davis, LLP; Matthew C. Cox

(57) **ABSTRACT**

A device for stabilizing a patient's arm during a surgical procedure including a base configured to fit on an operating table. A support arm has a proximal end attached to the base and a distal end extending away from the base. A cuff is mounted on the distal end of the support arm to support the wrist of a patient. One or more bicep pads are connected to the support arm and are positioned to fit about the bicep of a patient lying on an operating table.
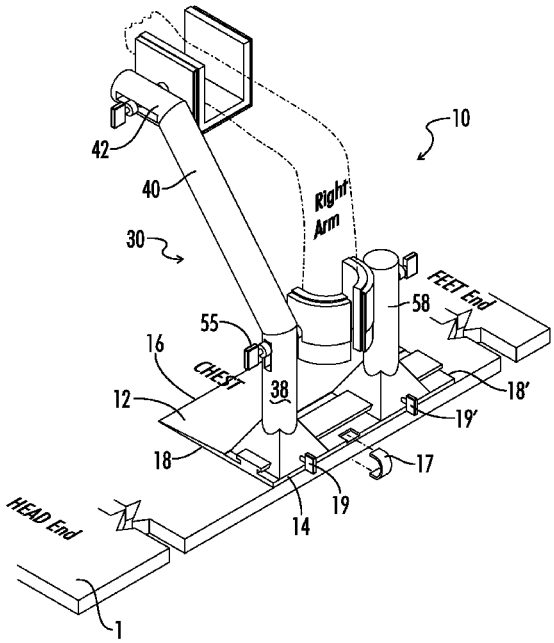
13 Claims, 6 Drawing Sheets