US006705868B1

(12) **United States Patent**
Schleppenbach et al.

(10) **Patent No.: US 6,705,868 B1**
(45) **Date of Patent: Mar. 16, 2004**

(54) **APPARATUS AND METHODS FOR A SHAPE MEMORY SPRING ACTUATOR AND DISPLAY**

(75) Inventors: **David A. Schleppenbach**, West Lafayette, IN (US); **Wunji Lau**, West Lafayette, IN (US); **Joe P. Said**, West Lafayette, IN (US)

(73) Assignee: **Purdue Research Foundation**, West Lafayette, IN (US)

(*) Notice: Subject to any disclaimer, the term of this patent is extended or adjusted under 35 U.S.C. 154(b) by 0 days.

(21) Appl. No.: **09/040,871**

(22) Filed: **Mar. 18, 1998**

(51) **Int. Cl.**[7] **G09B 21/00**

(52) **U.S. Cl.** **434/114**; 434/112

(58) **Field of Search** 434/112, 113, 434/114, 115; 184/75; 337/140; 60/527, 528, 529; 604/95.05; 600/143, 151, 206

(56) **References Cited**

U.S. PATENT DOCUMENTS

3,586,451	A	6/1971	Canton	
3,652,173	A	3/1972	Miller et al.	
3,653,777	A	4/1972	Bross	
3,951,554	A	4/1976	Jonkers	
4,033,053	A	7/1977	Engler	
4,115,015	A	9/1978	Torii	
4,194,190	A	3/1980	Bareau	
4,266,936	A	5/1981	Rose et al.	434/114
4,285,039	A	8/1981	Patterson et al.	364/200
4,553,393	A	11/1985	Ruoff	
4,559,512	A	12/1985	Yaeger et al.	
4,765,139	A	8/1988	Wood	
4,811,564	A	3/1989	Palmer	
4,871,992	A	10/1989	Petersen	
4,898,536	A	2/1990	Hoffarth	
5,070,697	A	12/1991	Van Zeggeren	
5,107,235	A *	4/1992	Torres-Isea	337/140
5,107,916	A	4/1992	van Roermund et al.	
5,165,897	A	11/1992	Johnson	
5,186,629	A	2/1993	Rohen	
5,453,012	A	9/1995	Hudecek	
5,580,251	A	12/1996	Gilkes et al.	
5,629,662	A	5/1997	Floyd et al.	
5,685,721	A	11/1997	Decker	
6,022,220	A *	2/2000	Haugen	434/112
6,085,871	A *	7/2000	Karamata	184/75

FOREIGN PATENT DOCUMENTS

DE	39 29 275 C1	3/1991
FR	2 718 266	10/1995
JP	59-198483	11/1984
JP	61-166580	7/1986
JP	2-134674	5/1990
JP	5-300705	11/1993
JP	6-227051	8/1994

OTHER PUBLICATIONS

Patent Abstracts of Japan, vol. 1999, No. 12, Oct. 29, 1999 JP 11 184369 A (Mitsubishi Cable Ind. Ltd.), Jul. 9, 1999 translated.

Patent Abstracts of Japan, vol. 1995, No. 08, Sep. 29, 1995 JP 07 119619 A (Ricoh Co. Ltd.), May 9, 1995 translated.

Patent Abstracts of Japan, vol. 007, No. 089 (M–207), Apr. 13, 1983 JP 58 013242 A (Sharp KK), Jan. 25, 1983 translated.

Haptic: A Haptic Tactile Display for the Presentation of Two–Dimensional Virtual or Remote Environments, AL/CF–TR–1995–0104, Mar. 1995, Report of Defense Technical Information Center, Ft. Belvoir, Virginia.

* cited by examiner

Primary Examiner—Sam Rimell
(74) *Attorney, Agent, or Firm*—Woodard, Emhardt, Moriarty, McNett & Henry LLP

(57) **ABSTRACT**

Various apparatus and methods for an actuator and display using one more shape memory springs. A shape memory spring is heated and urges a pin to a first or extended position. The pin may be supported in the first position by a supporting mechanism. The shape memory spring is heated electically, and in some embodiments under the control of a processor. The present invention may be used to display information provided in user interface from a computer program, including text, numerical data, and graphical images.
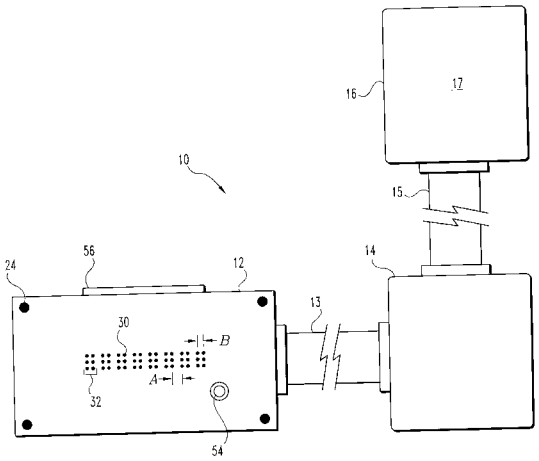
42 Claims, 12 Drawing Sheets