US005203668A

United States Patent [19]

Marmur

[11] Patent Number: 5,203,668

[45] Date of Patent: Apr. 20, 1993

[54] APPARATUS FOR LOADING AND UNLOADING OF A CONTAINER STRUCTURE OR OTHER LOADS WITH RESPECT TO A TRUCK BODY OR TRAILER

[75] Inventor: Lazar Marmur, 6608 Ravens Crest Dr., Plainsboro, N.J. 08536

[73] Assignees: E. Fisher; L. Marmur; F. Fisher; W. Kimble

[21] Appl. No.: 710,878

[22] Filed: Jun. 6, 1991

[51] Int. Cl.[5] B60P 1/28

[52] U.S. Cl. 414/500; 414/480; 414/494; 414/538

[58] Field of Search 414/473, 480, 491, 494, 414/500, 538, 556, 559, 571

[56] References Cited

U.S. PATENT DOCUMENTS

1,919,325	7/1933	Frick et al. .	
2,789,715	4/1957	Filipoff et al. .	
2,831,588	4/1958	Seed .	
3,032,217	5/1962	Musson et al. .	
3,139,289	6/1964	Richler .	
3,195,956	7/1965	Kou .	
3,259,255	7/1966	Cresci .	
3,322,396	5/1967	Hubbard .	
3,333,715	8/1967	Hepburn et al. .	
3,404,792	10/1968	Frieberg .	
3,467,268	9/1969	Corompt .	
3,484,004	12/1969	Hughey .	
3,499,678	3/1970	Richler .	
3,501,031	3/1970	Whitfield .	
3,501,035	3/1970	Whiting .	
3,592,503	7/1971	Lundberg	294/86 R
3,631,995	1/1972	Jones et al.	294/106
3,638,817	2/1972	Corompt .	
3,648,868	3/1972	Richler .	
3,671,016	6/1972	Gladysz	254/190
3,744,651	7/1973	Verschoof .	
3,817,415	6/1974	Lewis .	
3,822,802	7/1974	Evans, Jr. .	
3,830,542	8/1974	Lablanche	296/56
3,834,565	9/1974	Goodman, Jr. et al.	296/61
3,848,758	11/1974	Carter	296/26
3,863,971	2/1975	Meads et al.	294/67 AA
3,870,356	3/1975	Meads	294/67 A
3,878,948	4/1975	Corompt .	
3,892,323	7/1975	Corompt .	
3,964,626	6/1976	Arregui	414/480
3,988,035	10/1976	Corompt	298/12
4,015,737	4/1977	Wright et al.	254/3 R
4,054,218	10/1977	Mackey	280/80 B
4,079,988	3/1978	Randall	296/57 R
4,089,435	5/1978	Corompt .	
4,122,864	10/1978	Tardy et al.	137/625.6
4,147,266	4/1979	Corompt	414/480
4,278,283	7/1981	Fels	296/26
4,286,346	9/1981	Wiek	414/477
4,349,305	9/1982	Wynn et al.	414/408

(List continued on next page.)

FOREIGN PATENT DOCUMENTS

0002056	5/1979	European Pat. Off.	414/494
2347691	9/1973	Fed. Rep. of Germany	414/473
8303331	4/1985	Netherlands	414/491

Primary Examiner—Michael S. Huppert
Assistant Examiner—James Keenan
Attorney, Agent, or Firm—Sperry, Zoda & Kane

[57] ABSTRACT

An apparatus for loading a container or other load onto a truck body or trailer and for removal which includes a lower frame secured to the truck during movement and an upper frame pivotally secured with respect to the lower frame to facilitate loading and unloading. The upper frame has one or more rollers secured to an outermost portion thereof. A flexible drive cable is secured at one end to the lower frame and is secured at the other end to the container structure. The cable passes over the roller or rollers and is moved thereby during loading and unloading operations. The cable utilizes no drive other than merely the movement of the roller device with the upper frame which alters the direction of extension of the cable thereby facilitating loading and unloading of the container or load by use of a cable without any winching operation.
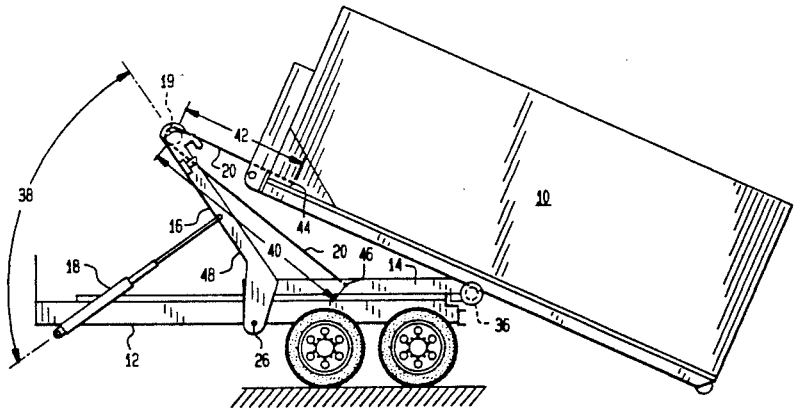
19 Claims, 7 Drawing Sheets