FIG. 12

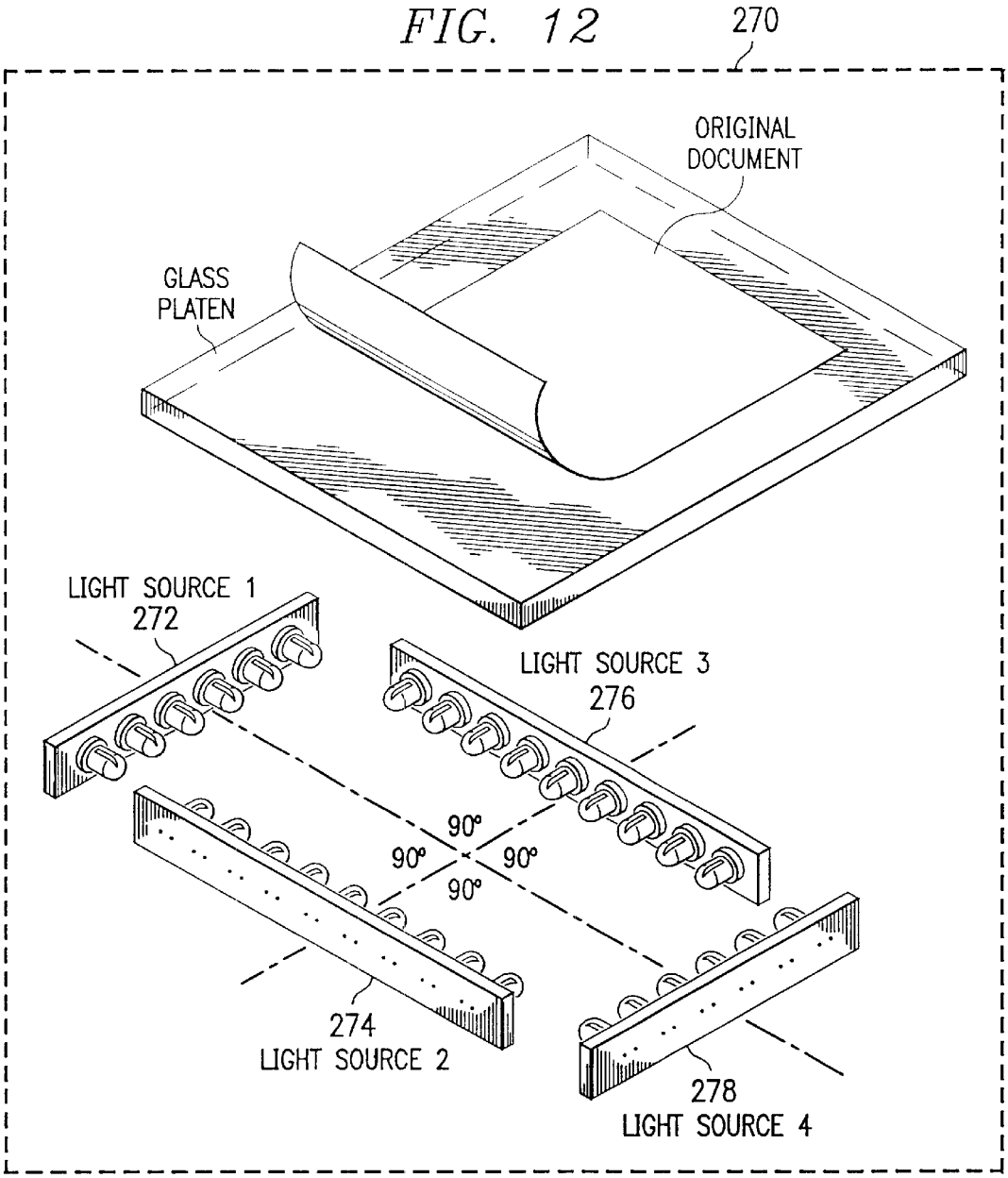
270
ORIGINAL DOCUMENT
GLASS PLATEN
LIGHT SOURCE 1
272
LIGHT SOURCE 3
276
90°
90°
90°
90°
274
LIGHT SOURCE 2
278
LIGHT SOURCE 4