FIG. 1

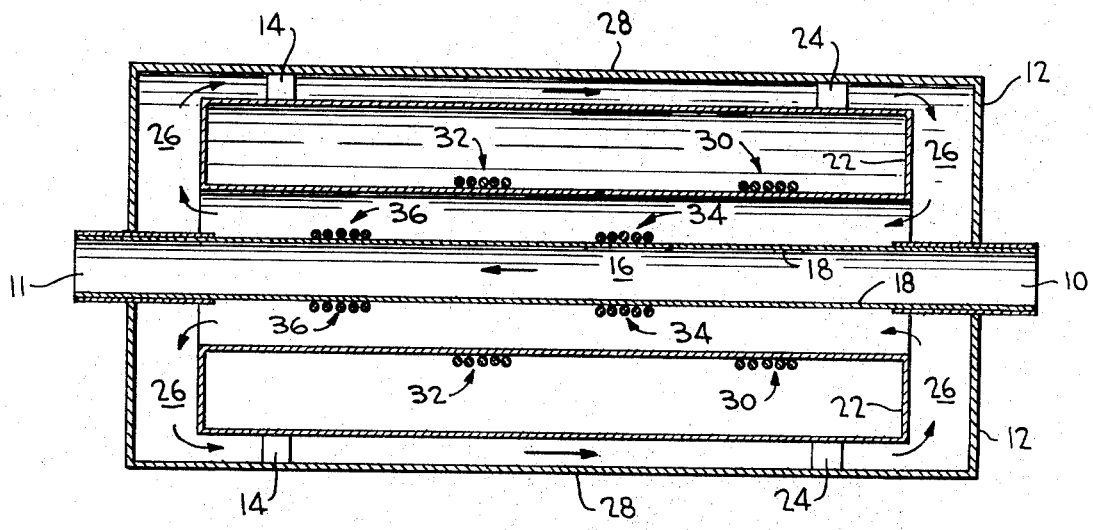

FIG. 2

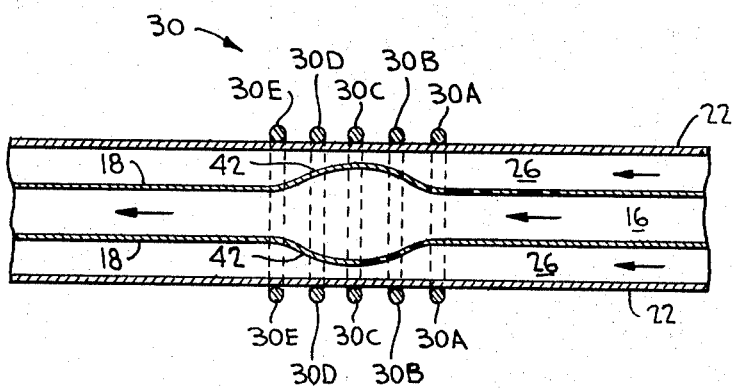

FIG. 3

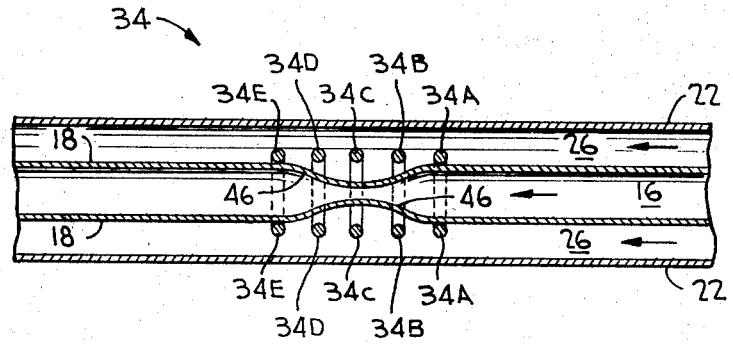

INVENTOR,
CLYDE A. MORRISON
BY Harry M. Saragovitz
Edward J. Kelly
Herbert Berl
Saul Elbaum
ATTORNEYS