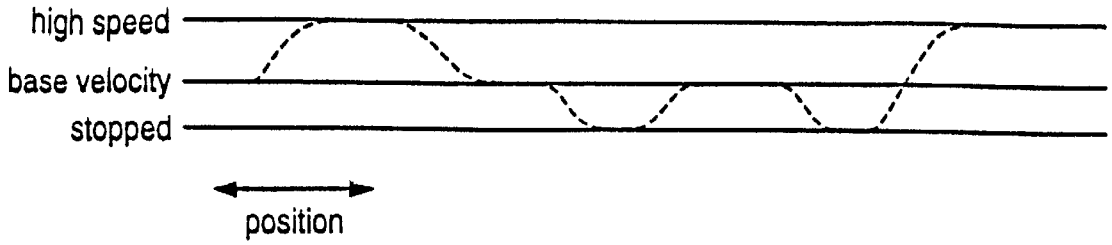
high speed
base velocity
stopped
position

FIG. 14

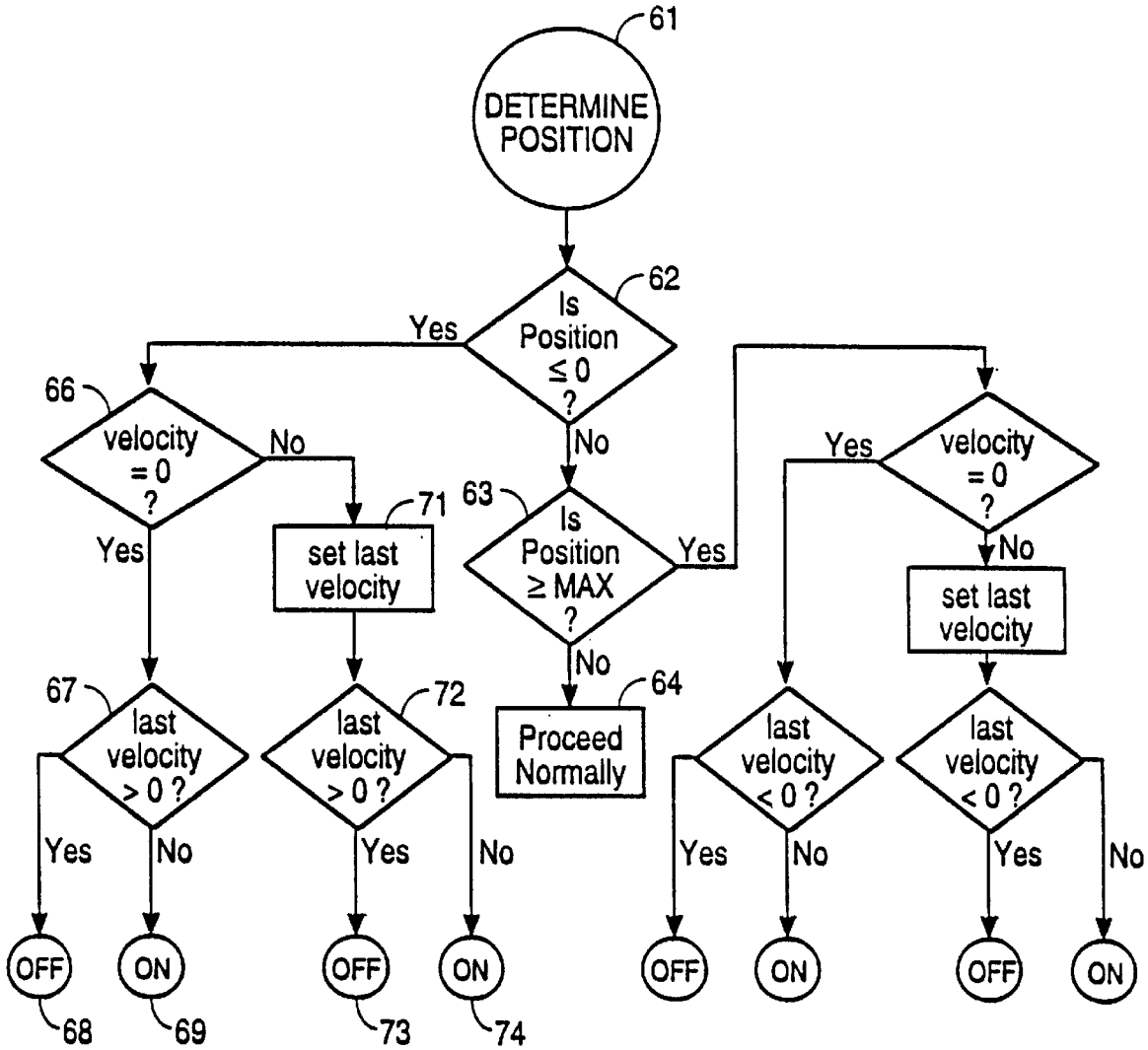
61
DETERMINE POSITION
62
Is Position ≤ 0 ?
Yes
No
66
velocity = 0 ?
No
Yes
71
set last velocity
63
Is Position ≥ MAX ?
Yes
No
64
Proceed Normally
Yes
velocity = 0 ?
No
set last velocity
67
last velocity > 0 ?
72
last velocity > 0 ?
last velocity < 0 ?
last velocity < 0 ?
Yes
No
OFF
ON
68
69
73
74

FIG. 15