United States Patent

Brun

[15] **3,675,067**

[45] **July 4, 1972**

[54] **OPTICAL RESONANCE CELL WITH MEANS FOR REGULATING INTERNAL VAPOR PRESSURE**

[72] Inventor: **Henri Brun,** Paris, France

[73] Assignee: **CSF-Compagnie Generale de Telegraphite Sans Fil**

[22] Filed: **March 16, 1971**

[21] Appl. No.: **124,974**

Related U.S. Application Data

[63] Continuation of Ser. No. 796,236, Feb. 3, 1969, abandoned.

[30] **Foreign Application Priority Data**

Feb. 2, 1968 France 68138532

[52] **U.S. Cl.** .....**313/174,** 324/0.5 F

[51] **Int. Cl.** **H01j 61/24**

[58] **Field of Search** .....313/174, 181; 331/94.5; 324/.5 F; 315/108

[56] **References Cited**

UNITED STATES PATENTS

3,353,037	11/1967	Jester et al.	313/174 X
2,030,404	2/1936	Ryde et al.	315/108
2,081,247	5/1937	Mulder	315/108 X
2,280,618	4/1942	Besson	313/174 X
3,242,423	3/1966	Malnar	324/.5 F
3,331,977	7/1967	Wainio	313/220 X
3,486,058	12/1969	Hernquist	331/94.5
3,084,257	4/1963	Goddard	313/174 X

FOREIGN PATENTS OR APPLICATIONS

1,036,002	7/1966	Great Britain	324/.5 F

Primary Examiner—Roy Lake
Assistant Examiner—Palmer C. Demeo

[57] **ABSTRACT**

An optical resonance cell containing an alkali vapor to be optically pumped, the transparent walls of which are coated with a layer of paraffin while a bulb containing the reserve of alkali metal is connected to the cell in such a manner as to decelerate the alkali vapor flow between the bulb and the cell.
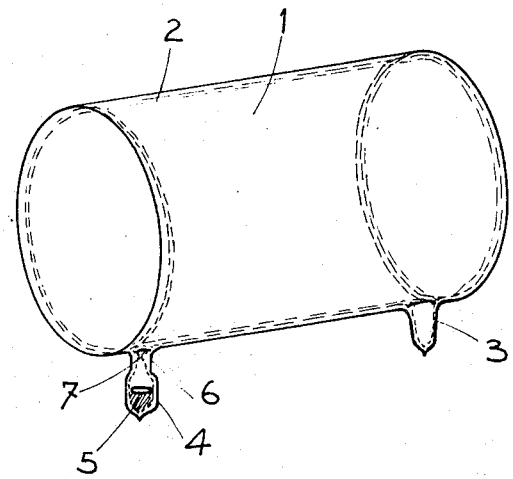
7 Claims, 2 Drawing Figures