June 5, 1928.

1,672,067

P. F. LABRE

GROUNDING RECEPTACLE AND PLUG

Filed May 12, 1927

Fig. 1.

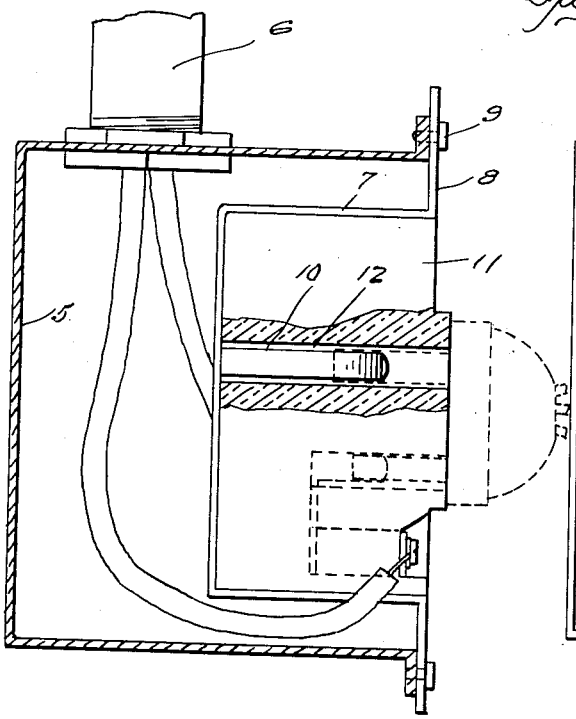

Fig. 2.

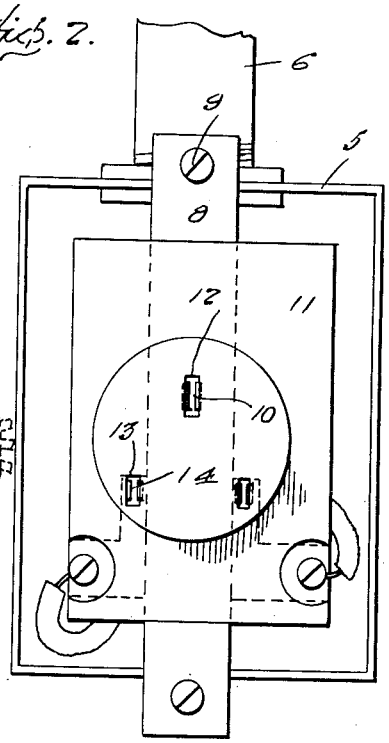

Fig. 3.

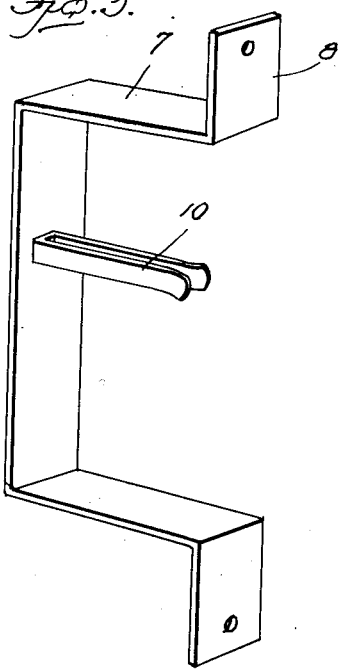

Fig. 4.

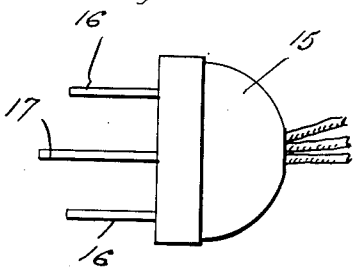

Inventor

Philip F. Labre

By Clarence A. O'Brien

Attorney