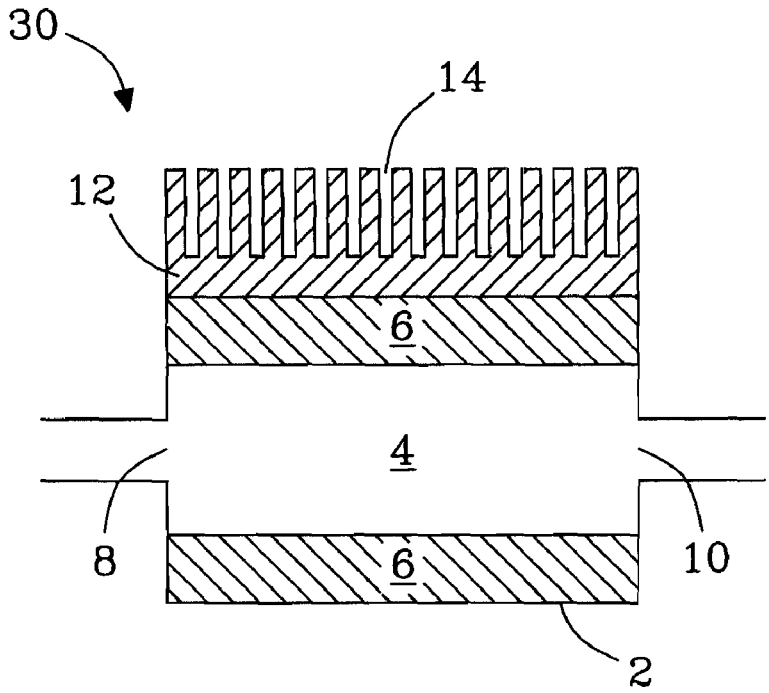
30
14
12
6
4
8
6
10
2

Fig. 1

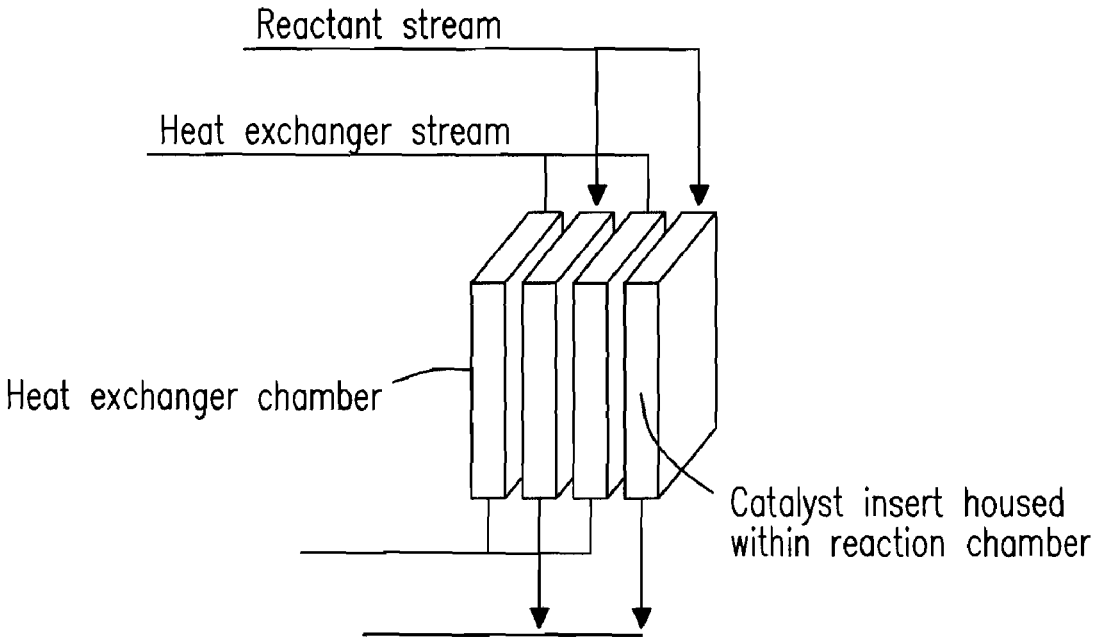
Reactant stream
Heat exchanger stream
Heat exchanger chamber
Catalyst insert housed within reaction chamber

Fig. 2