US005654367A

United States Patent [19]

Takimoto et al.

[11] Patent Number: 5,654,367

[45] Date of Patent: Aug. 5, 1997

[54] **ORGANIC POLYMER AND PREPARATION AND USE THEREOF**

[75] Inventors: **Akio Takimoto**; **Hirofumi Wakemoto**, both of Neyagawa; **Eiichiro Tanaka**, Kishiwada; **Masanori Watanabe**, Katano; **Junko Asayama**, Suita; **Hisahito Ogawa**, Ikoma-gun; **Shigehiro Sato**, Osaka; **Fumiko Yokotani**, Suita, all of Japan

[73] Assignee: **Matsushita Electric Industrial Co., Ltd.**, Osaka, Japan

[21] Appl. No.: **453,061**

[22] Filed: **May 26, 1995**

Related U.S. Application Data

[62] Division of Ser. No. 90,638, Jul. 13, 1993, Pat. No. 5,486,442, which is a continuation of Ser. No. 673,759, Mar. 25, 1991, abandoned.

[30] **Foreign Application Priority Data**

Mar. 23, 1990	[JP]	Japan	2-073777
Mar. 23, 1990	[JP]	Japan	2-073778
Mar. 23, 1990	[JP]	Japan	2-073779
Mar. 25, 1990	[JP]	Japan	2-074971
Nov. 29, 1990	[JP]	Japan	2-335910

[51] **Int. Cl.**[6] **C08F 8/30**; C08L 77/00

[52] **U.S. Cl.** **525/178**; 525/180; 525/181; 528/288; 528/290; 528/295; 528/422; 528/425

[58] **Field of Search** 525/178, 180, 525/181; 528/272, 288, 290, 295, 422, 425

[56] **References Cited**

U.S. PATENT DOCUMENTS

4,698,295	10/1987	Pfeifer et al.	430/270
5,030,533	7/1991	Bluhm et al.	430/59
5,034,296	7/1991	Ong et al.	430/59
5,155,200	10/1992	Limburg et al.	528/67
5,316,880	5/1994	Pai et al.	430/59
5,380,807	1/1995	Havinga et al.	526/257
5,384,649	1/1995	Takimoto et al.	359/67

FOREIGN PATENT DOCUMENTS

0240249	10/1987	European Pat. Off. .
0283636	9/1988	European Pat. Off. .
0300326	1/1989	European Pat. Off. .
0375165	6/1990	European Pat. Off. .
2400224	3/1979	France .

OTHER PUBLICATIONS

Patent Abstracts of Japan, vol. 13, No. 93 (P–838) (3441) Mar. 6, 1989.

Patent Abstracts of Japan, vol. 8, No. 257 (P–316) (1694) Nov. 24, 1984.

World Patents Index, Week 8726, Derwent Publications, AN 87–181570.

World Patents Index, Week 8818, Derwent Publications, AN 88–123712.

Primary Examiner—James J. Seidleck
Assistant Examiner—Duc Truong
Attorney, Agent, or Firm—Wenderoth, Lind & Ponack

[57] **ABSTRACT**

An alternating copolymer comprising a repeating unit of the formula:

$$-Z-(X-Y)_n- \quad (I)$$

wherein n is at least 2, X is O, S, Se or Te, and Y and Z are independently an aromatic or substituted aromatic group, and at least one other repeating unit, which is useful as a photosensitive material used in a spatial light modulator.
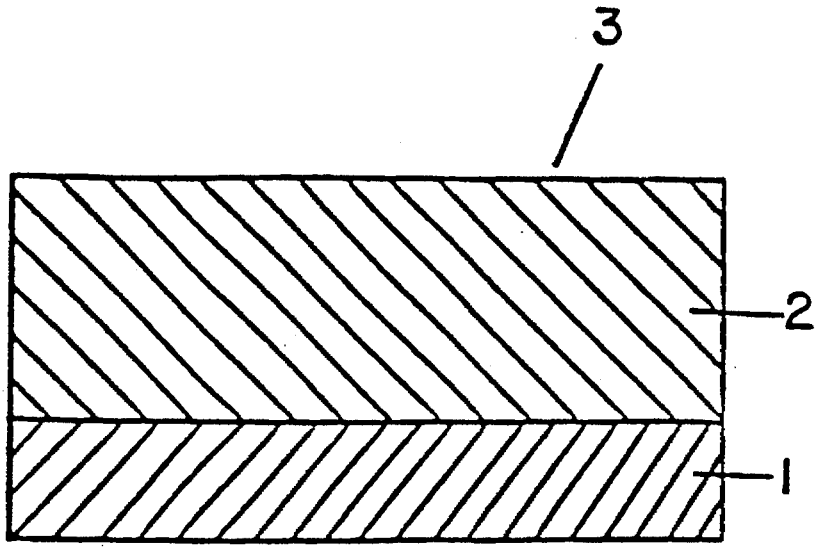
5 Claims, 47 Drawing Sheets