US005842867A

United States Patent [19]

Hong et al.

[11] **Patent Number: 5,842,867**

[45] **Date of Patent: Dec. 1, 1998**

[54] **GRAPHIC TACTILE CELL**

[75] Inventors: **Ri Su Hong**; **In Sik Lee**; **Akiyoshi Morita**, all of Tokyo, Japan

[73] Assignee: **KGS Corporation**, Japan

[21] Appl. No.: **843,915**

[22] Filed: **Apr. 17, 1997**

[51] **Int. Cl.**[6] **G09B 21/00**

[52] **U.S. Cl.** **434/114**; 434/113

[58] **Field of Search** 434/113, 114, 434/115, 112

[56] **References Cited**

U.S. PATENT DOCUMENTS

3,299,387	1/1967	Linvill .	
4,283,178	8/1981	Tetzlaff	434/114
4,633,121	12/1986	Ogawa et al.	434/114
4,664,632	5/1987	Tretiakoff et al.	434/114
4,758,165	7/1988	Tieman et al.	434/114
5,226,817	7/1993	Nakajima et al.	434/115
5,286,199	2/1994	Kiake	434/112
5,449,262	9/1995	Tam et al.	434/113
5,466,154	11/1995	Thompson	434/114
5,580,251	12/1996	Gilkes et al.	434/112
5,685,720	11/1997	Kashi	434/114
5,685,721	11/1997	Decker	434/114

FOREIGN PATENT DOCUMENTS

0 581 352 A1	2/1994	European Pat. Off. .	
2463466	2/1981	France .	
3733612 A1	4/1989	Germany .	
WO89/11712	11/1989	Germany	434/114
3811406 A1	1/1990	Germany .	
3920386 A1	1/1990	Germany .	
3923967 A1	1/1991	Germany .	
4241937A1	6/1994	Germany .	
1-54712	7/1985	Japan .	
3-32236	10/1987	Japan .	

OTHER PUBLICATIONS

Japanese Abstract 08220988; Fujiwara Yasuhiro; Braille Data Input/Output Terminal; Aug. 30, 1996.

Japanese Abstract 06289775; Kumeno Kiyomitsu; Braille Character Reading Sensor; Oct. 18, 1994.

Japanese Abstract 05333765; Shimokura Kenichiro; Data Input/Output Device; Dec. 17, 1993.

European Patent Office Search Report; 97106110.6; KGS Corporation; Feb. 24, 1998.

Primary Examiner—Paul J. Hirsch

Attorney, Agent, or Firm—Christensen O'Connor Johnson and Kindness PLLC

[57] **ABSTRACT**

This invention relates to a graphic tactile cell for indicating a graphic pattern, in which the arrangement of the tactile surface can be enlarged easily. This graphic tactile cell includes tactile pins for indicating a graphic pattern by vertical movement, piezoelectric element segments which are bent upon application of a voltage to vertically drive the tactile pins, and a unit base for holding the tactile pins and the piezoelectric element segments. A plurality of cell units each including a unit number of tactile pins, corresponding piezoelectric element segments, and a unit base for holding the tactile pins and the piezoelectric element segments are coupled vertically and horizontally such that the tactile pins are arranged at an equal interval in vertical and horizontal directions. Proximal ends of the piezoelectric element segments are held by the unit base through plastically deformable adjusting members.
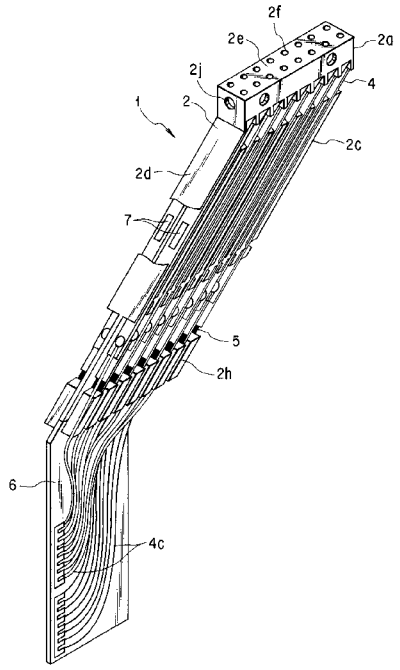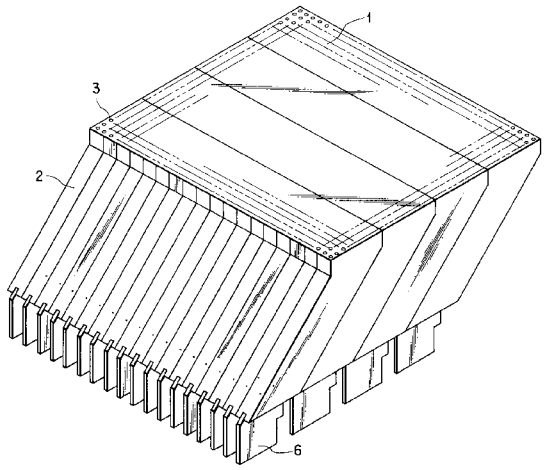
8 Claims, 4 Drawing Sheets