US005836467A

United States Patent [19]

Montgomery

[11] **Patent Number: 5,836,467**

[45] **Date of Patent: Nov. 17, 1998**

[54] **DOUBLE-SHELL CLOSURE HAVING AN ARCUATE GROOVE**

[75] Inventor: **Gary V. Montgomery**, Evansville, Ind.

[73] Assignee: **Rexam Plastics Inc.**, Evansville, Ind.

[21] Appl. No.: **862,077**

[22] Filed: **May 22, 1997**

[51] **Int. Cl.**[6] **B65D 55/02**

[52] **U.S. Cl.** **215/216**; 215/334

[58] **Field of Search** 215/216, 217, 215/334

[56] **References Cited**

U.S. PATENT DOCUMENTS

1,577,019	3/1926	Hammer .	
2,423,582	7/1947	Coleman .	
3,079,022	2/1963	Tompkins .	
3,606,063	9/1971	Childs et al. .	
3,848,761	11/1974	Libit .	
4,116,351	9/1978	Uhlig	215/216
4,310,101	1/1982	Sekine .	
4,535,906	8/1985	Rowekamp .	
4,763,804	8/1988	O'Connell .	
5,207,341	5/1993	Yeager	215/334
5,236,101	8/1993	Dugmore .	
5,460,283	10/1995	MaCartney et al. .	
5,603,421	2/1997	Opresco	215/217

Primary Examiner—Stephen K. Cronin
Attorney, Agent, or Firm—Middleton & Reutlinger; Daniel C. Stelter, Esq.

[57] **ABSTRACT**

A closure is provided having concentric inner and outer spaced cylindrical shells attached at respective first distal ends thereof by a circular top wall. An arcuate groove is provided in an upper surface of the top wall integral with the inner cylindrical shell.
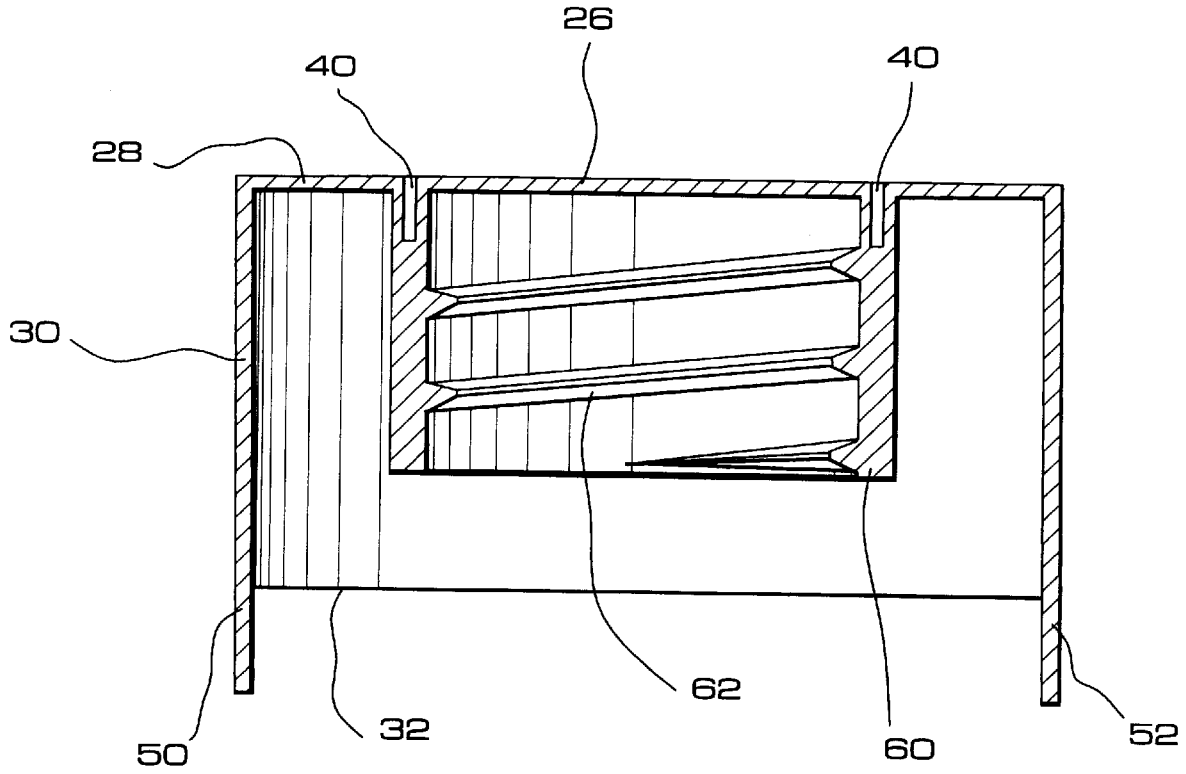
6 Claims, 5 Drawing Sheets