US009411167B1

(12) **United States Patent**
Brown

(10) **Patent No.: US 9,411,167 B1**
(45) **Date of Patent: Aug. 9, 2016**

(54) **AUTO-MULTISCOPIC 3D BILLBOARD DISPLAY SYSTEM**

(71) Applicant: **Kedrick F. Brown**, Houston, TX (US)

(72) Inventor: **Kedrick F. Brown**, Houston, TX (US)

(*) Notice: Subject to any disclaimer, the term of this patent is extended or adjusted under 35 U.S.C. 154(b) by 0 days.

(21) Appl. No.: **15/084,221**

(22) Filed: **Mar. 29, 2016**

(51) **Int. Cl.**
G02B 27/22 (2006.01)
G02B 5/10 (2006.01)
G09F 13/16 (2006.01)

(52) **U.S. Cl.**
CPC ***G02B 27/2214*** (2013.01); ***G02B 5/10*** (2013.01); ***G09F 13/16*** (2013.01)

(58) **Field of Classification Search**
CPC .. G02B 27/2214; G02B 27/225; G02B 5/201; G02B 5/003; H04N 13/0404; H04N 13/0409; H04N 2213/001; H04N 13/0418; H04N 9/3129; H04N 9/3147; G09F 19/18
USPC 359/462, 463, 464, 466, 475, 477, 443, 359/454, 455, 458, 459
See application file for complete search history.

(56) **References Cited**

U.S. PATENT DOCUMENTS

3,704,055	A *	11/1972	Hong	G03B 21/602 359/455
6,189,246	B1	2/2001	Gorthala	
6,837,585	B2	1/2005	Roggatz	
7,136,031	B2	11/2006	Lee et al.	
7,483,215	B2	1/2009	Raymond	
7,573,491	B2	8/2009	Hartkop et al.	
7,752,792	B2	7/2010	Hsieh et al.	
7,859,750	B2 *	12/2010	Akiyama	G03B 21/60 359/454
8,427,528	B2	4/2013	Saishu et al.	
8,749,722	B2	6/2014	Uehara	
9,146,403	B2	9/2015	Lanman et al.	
2009/0071050	A1 *	3/2009	Hines	G09F 19/22 40/564
2014/0003762	A1	1/2014	Macnamara	

* cited by examiner

Primary Examiner — Jade R Chwasz
(74) *Attorney, Agent, or Firm* — Louis Ventre, Jr.

(57) **ABSTRACT**

A billboard display system includes a light source housed in a box-like structure. The light source shines light away from a non-transparent front wall and through a transparent rear wall and thence through a sheet of projection film having an array of images thereon and thence is reflected by a corresponding array of concave mirrors back to corresponding apertures. The apertures are formed at the bottom of indentations, preferably cone-shaped throughout the area of the front wall. The light passes through the apertures and thence out of the indentations to create a 3D image in the eyes of a viewer looking at the front wall.
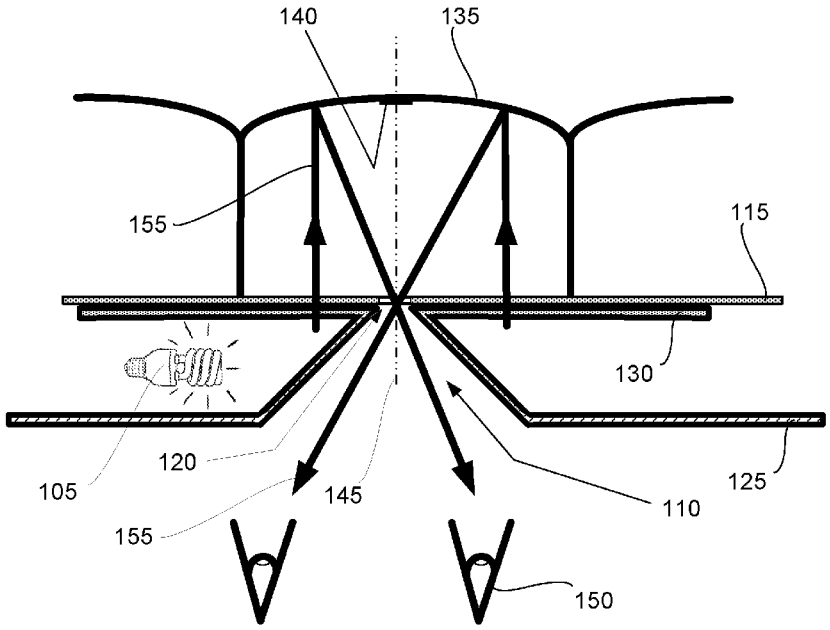
8 Claims, 7 Drawing Sheets