US009410567B2

(12) **United States Patent**
Swanson et al.

(10) **Patent No.: US 9,410,567 B2**
(45) **Date of Patent: Aug. 9, 2016**

(54) **SYSTEM FOR CONNECTING AND ALIGNING A MULTIPLE PIECE CATWALK TROUGH**

(71) Applicant: **FORUM US, INC.**, Houston, TX (US)

(72) Inventors: **Gregory David Swanson**, Magnolia, TX (US); **Joe Rodney Berry**, Cypress, TX (US)

(73) Assignee: **FORUM US, INC.**, Houston, TX (US)

(*) Notice: Subject to any disclaimer, the term of this patent is extended or adjusted under 35 U.S.C. 154(b) by 127 days.

(21) Appl. No.: **14/207,073**

(22) Filed: **Mar. 12, 2014**

(65) **Prior Publication Data**

US 2014/0270904 A1 Sep. 18, 2014

Related U.S. Application Data

(60) Provisional application No. 61/780,457, filed on Mar. 13, 2013.

(51) **Int. Cl.**

F16G 11/00	(2006.01)
F16B 7/00	(2006.01)
F16B 5/02	(2006.01)
F16B 19/02	(2006.01)

(52) **U.S. Cl.**

CPC . ***F16B 7/00*** (2013.01); ***F16B 5/025*** (2013.01); *F16B 19/02* (2013.01); *Y10T 29/49895* (2015.01); *Y10T 403/1624* (2015.01)

(58) **Field of Classification Search**

CPC Y10T 403/1624; Y10T 403/1633; Y10T 403/49895; E21B 19/15; F16B 7/00; F16B 5/025; F16B 19/02

USPC 403/14, 15, 24, 101, 102, 345, 346, 403/378, 398

See application file for complete search history.

(56) **References Cited**

U.S. PATENT DOCUMENTS

2,019,755	A	11/1935	Zerbe et al.	
2,527,097	A *	10/1950	Katow	B66F 19/00 254/8 R
2,726,123	A *	12/1955	Mathews	E04C 2/42 137/342
3,256,552	A *	6/1966	Sterner	E05D 3/022 16/273
3,472,475	A *	10/1969	Rudiger	E01D 21/00 248/228.1
4,285,097	A *	8/1981	Kondo	H01H 23/143 16/441
4,790,047	A *	12/1988	Myslicki	E05D 5/10 16/273
4,806,042	A *	2/1989	Swank	F16B 3/00 403/101
4,899,611	A *	2/1990	Pinna	B62D 1/20 180/400
5,263,810	A	11/1993	Takekata et al.	
5,295,558	A *	3/1994	Cooperman	E04G 1/151 182/222
5,360,313	A	11/1994	Gilmore, Jr. et al.	
5,456,483	A *	10/1995	Madsen	B62D 53/0871 280/432
6,158,087	A	12/2000	Cheung	

(Continued)

OTHER PUBLICATIONS

PCT International Search Report and Written Opinion for Application PCT/US2014/025626, dated Sep. 25, 2014.

Primary Examiner — Gregory Binda
Assistant Examiner — Nahid Amiri
(74) *Attorney, Agent, or Firm* — Patterson & Sheridan, L.L.P.

(57) **ABSTRACT**

A system for connecting and aligning pieces of a catwalk trough that prevents sagging of the catwalk trough at a connection point between at least two pieces of the catwalk trough by applying a force to the pieces to counteract any separation forces.
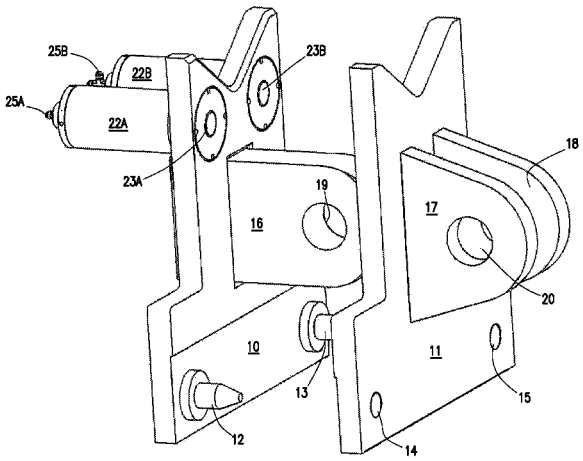
17 Claims, 13 Drawing Sheets