US009410367B2

(12) **United States Patent**
Coker et al.

(10) **Patent No.: US 9,410,367 B2**
(45) **Date of Patent: Aug. 9, 2016**

(54) **SYSTEM AND METHOD FOR A MODULAR, LOCKING HEADRAIL-RETENTION MECHANISM**

(71) Applicant: **GLOBAL CUSTOM COMMERCE, INC.**, Houston, TX (US)

(72) Inventors: **Tuluhan Coker**, Istanbul (TR); **Daniel H. Cotlar**, Houston, TX (US); **Berk Coker**, Istanbul (TR)

(73) Assignee: **GLOBAL CUSTOM COMMERCE INC.**, Houston, TX (US)

(*) Notice: Subject to any disclaimer, the term of this patent is extended or adjusted under 35 U.S.C. 154(b) by 438 days.

(21) Appl. No.: **13/629,140**

(22) Filed: **Sep. 27, 2012**

(65) **Prior Publication Data**

US 2014/0086676 A1 Mar. 27, 2014

(51) **Int. Cl.**
E06B 9/00 (2006.01)
E06B 9/323 (2006.01)

(52) **U.S. Cl.**
CPC ***E06B 9/323*** (2013.01); *Y10T 403/60* (2015.01)

(58) **Field of Classification Search**
CPC A47H 1/022; A47H 1/102; E06B 9/50; E06B 9/78; E06B 9/323; Y10T 403/60
USPC ..... 160/168.1 R, 368.1 R; 211/105.1–105.4; 248/251–259, 261–272; 401/109, 115, 401/116; 403/109.1, 109.2, 109.3, 109.5, 403/292, 298, 304, 308, 314, 325–327
See application file for complete search history.

(56) **References Cited**

U.S. PATENT DOCUMENTS

1,232,729	A *	7/1917	Starn	248/268
3,952,877	A *	4/1976	Kindl	211/105.5
4,809,401	A *	3/1989	Honig	16/87.2
4,848,432	A *	7/1989	Connolly	160/178.1 R
7,549,615	B2	6/2009	Shevick	
8,479,932	B2 *	7/2013	Carney	211/105.5
8,505,129	B2 *	8/2013	Parker et al.	4/610
8,596,594	B2 *	12/2013	Shevick	248/200.1
2008/0245486	A1 *	10/2008	Brown	160/84.01
2010/0003062	A1 *	1/2010	Tamano et al.	401/104
2010/0276090	A1 *	11/2010	Zagone	160/368.1
2011/0031198	A1 *	2/2011	Trettin et al.	211/123
2013/0084130	A1 *	4/2013	McClure	403/327

* cited by examiner

Primary Examiner — Syed A Islam
Assistant Examiner — Jeremy Ramsey
(74) *Attorney, Agent, or Firm* — Greenberg Traurig, LLP

(57) **ABSTRACT**

In accordance with the present disclosure, a system and method for Modular, Locking Headrail-Retention Mechanism is described. The module, locking headrail-retention mechanism may, in certain embodiments be separate from a headrail, and insertable into at least one end of the headrail. In other embodiment, the locking headrail-retention mechanism may be manufactured as part of the headrail. The locking headrail-retention mechanism may comprise a cylindrical housing and a first cam disposed within the cylindrical housing. The locking headrail-retention mechanism may also include a retention plate proximate one end of the cylindrical housing and axially aligned with the first cam. A biasing member may be disposed within the cylindrical housing, and may impart an axial force on the first cam. The first cam may be operable to selectively prevent the axial force from being imparted on the retention plate.
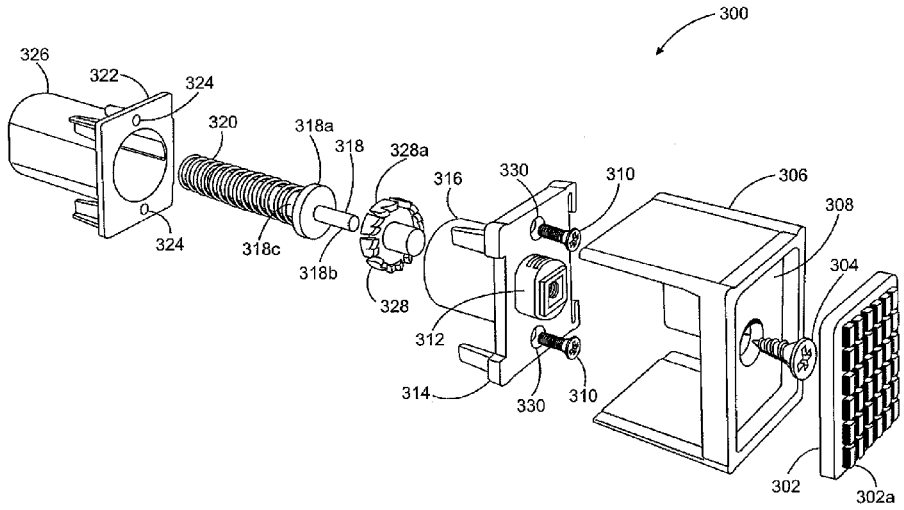
30 Claims, 4 Drawing Sheets