Oct. 27, 1959 W. J. HOBSON 2,909,867

CONSTRUCTIONAL TOY

Filed Feb. 27, 1956

Fig. 1

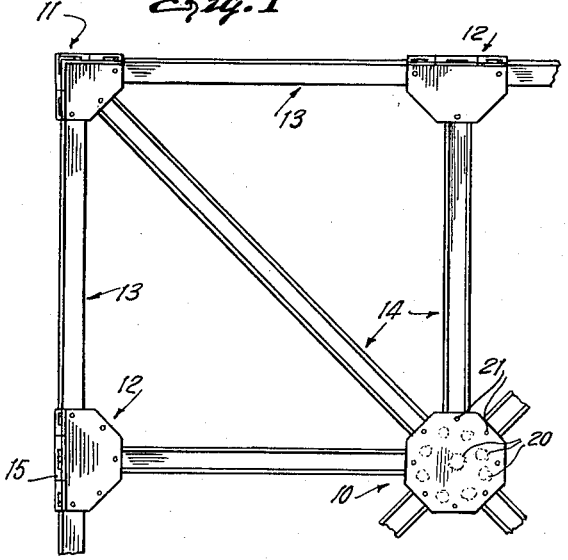

Fig. 5

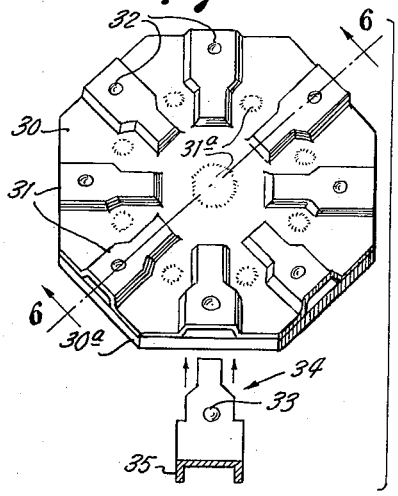

Fig. 6

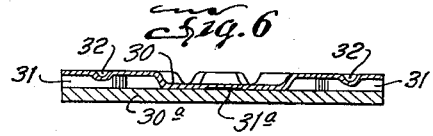

Fig. 2

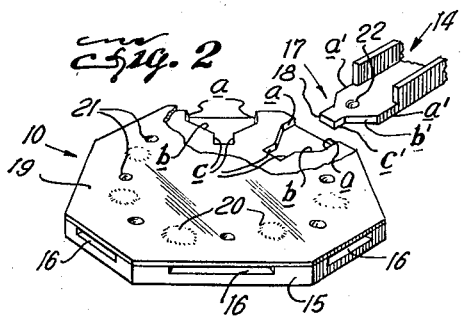

Fig. 7

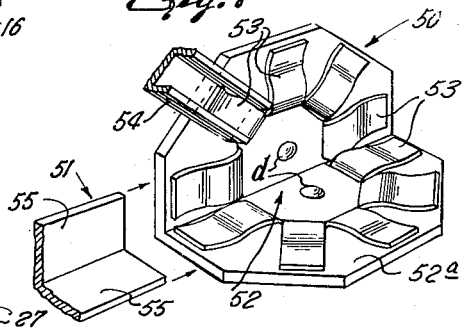

Fig. 3

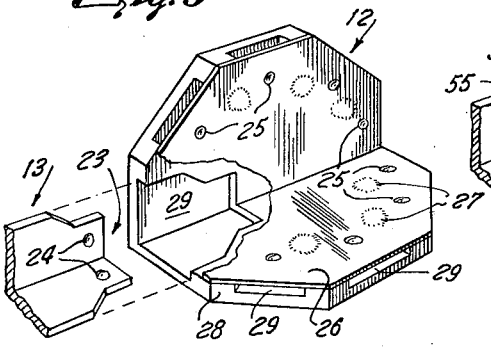

William J. Hobson
INVENTOR

Fig. 4

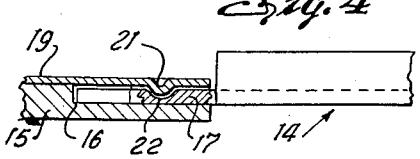

BY Ernest L. Hood

ATTORNEY