US009408767B2

(12) **United States Patent**
Atalay et al.

(10) **Patent No.: US 9,408,767 B2**
(45) **Date of Patent: Aug. 9, 2016**

(54) **SURGICAL OPERATING TABLE**

(71) Applicant: **YEDITEPE UNIVERSITESI**, Istanbul (TR)

(72) Inventors: **Basar Atalay**, Istanbul (TR); **Cem Tutcu**, Istanbul (TR); **Onur Deryahanoglu**, Istanbul (TR)

(73) Assignee: **YEDITEPE UNIVERSITESI**, Istanbul (TR)

(*) Notice: Subject to any disclaimer, the term of this patent is extended or adjusted under 35 U.S.C. 154(b) by 0 days.

(21) Appl. No.: **14/443,651**

(22) PCT Filed: **Nov. 14, 2013**

(86) PCT No.: **PCT/IB2013/002537**

§ 371 (c)(1),
(2) Date: **May 18, 2015**

(87) PCT Pub. No.: **WO2014/076546**

PCT Pub. Date: **May 22, 2014**

(65) **Prior Publication Data**

US 2015/0265483 A1 Sep. 24, 2015

(30) **Foreign Application Priority Data**

Nov. 16, 2012 (TR) a2012/13288

(51) **Int. Cl.**

A47B 7/02	(2006.01)
A61G 13/00	(2006.01)
A61G 13/12	(2006.01)
A61G 13/08	(2006.01)
A61G 13/02	(2006.01)
A61G 13/04	(2006.01)

(52) **U.S. Cl.**

CPC ***A61G 13/0036*** (2013.01); ***A61G 13/08*** (2013.01); ***A61G 13/122*** (2013.01); *A61G 13/02* (2013.01); *A61G 13/04* (2013.01); *A61G 2013/0054* (2013.01)

(58) **Field of Classification Search**

CPC . A61G 13/0036; A61G 13/08; A61G 13/122; A61G 13/02; A61G 13/04; A61G 13/06; A61G 13/0054; A61G 2013/0054

See application file for complete search history.

(56) **References Cited**

U.S. PATENT DOCUMENTS

5,131,106	A	7/1992	Jackson
5,239,716	A	8/1993	Fisk
5,584,302	A	12/1996	Sillaway et al.
6,076,525	A	6/2000	Hoffman
6,154,901	A	12/2000	Carr
7,587,770	B1	9/2009	Reser

FOREIGN PATENT DOCUMENTS

EP	0389188	A2	9/1990
GB	2466563	A	6/2010
WO	WO0044329	A1	8/2000

OTHER PUBLICATIONS

Wilson Plus: "Mizuhosi 2009 1 NW0557 Rev. C", Jan. 1, 2010, XP055112067.

Primary Examiner — David E Sosnowski
Assistant Examiner — Morgan McClure
(74) *Attorney, Agent, or Firm* — Gokalp Bayramoglu

(57) **ABSTRACT**

The present invention relates to a lightweight and durable surgery table (**1**), which particularly facilitates performing spinal surgical operations, is transparent to radiographic rays and can be adjusted according to the position of the patient.
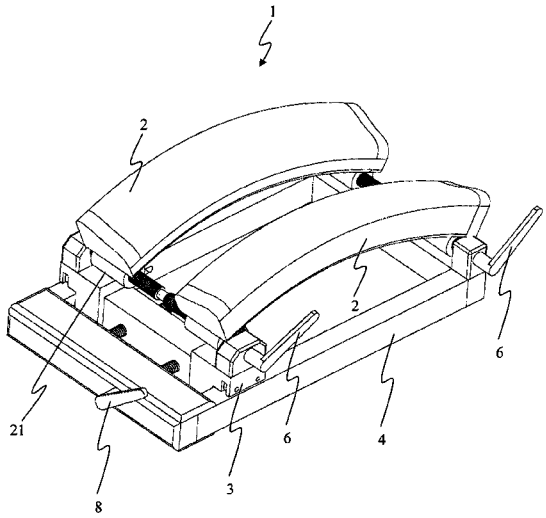
8 Claims, 4 Drawing Sheets