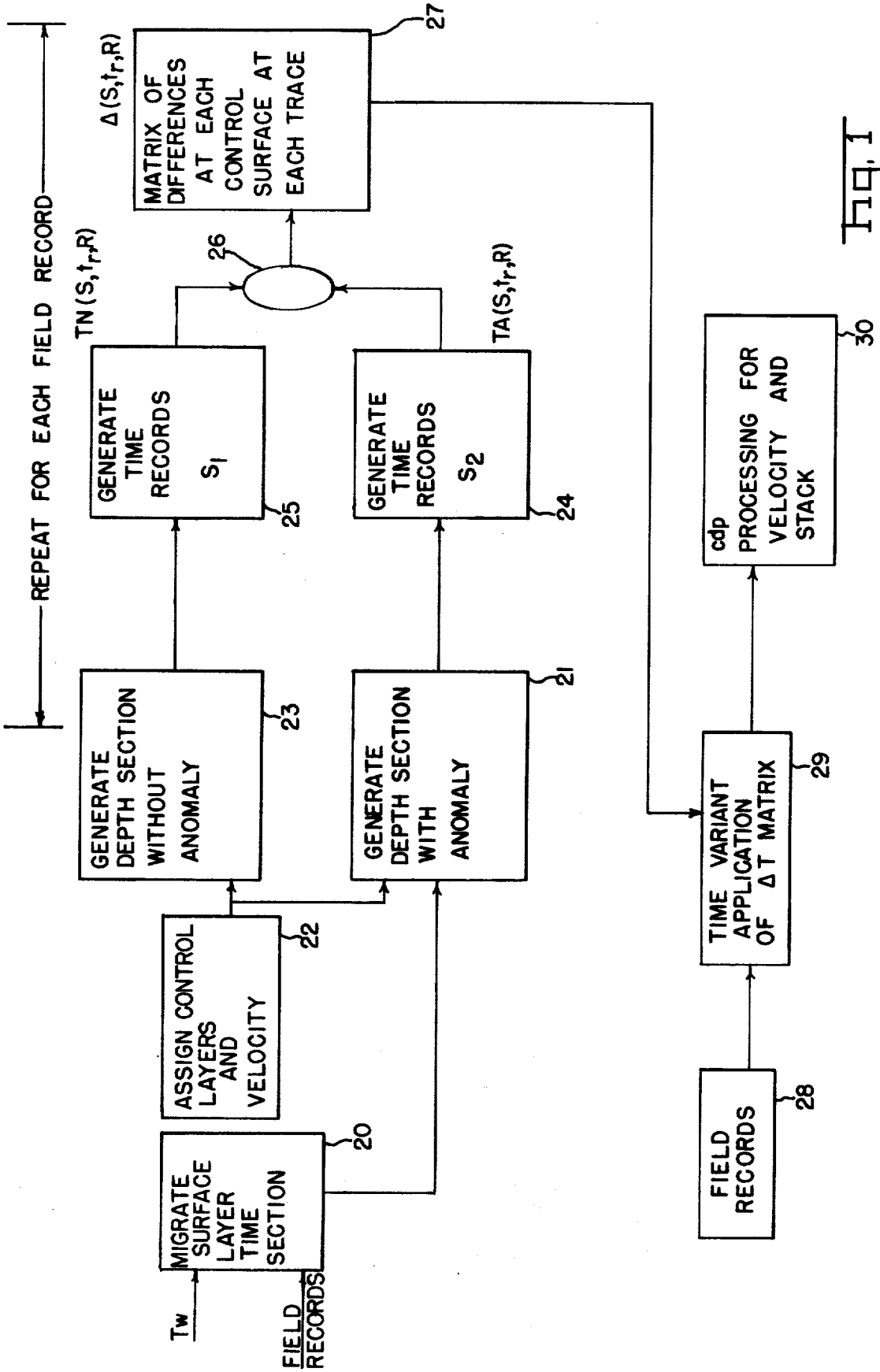
REPEAT FOR EACH FIELD RECORD
Tw
FIELD RECORDS
MIGRATE SURFACE LAYER TIME SECTION
20
ASSIGN CONTROL LAYERS AND VELOCITY
22
GENERATE DEPTH SECTION WITHOUT ANOMALY
23
GENERATE DEPTH SECTION WITH ANOMALY
21
GENERATE TIME RECORDS S1
25
GENERATE TIME RECORDS S2
24
TN(S,tr,R)
TA(S,tr,R)
26
Δ(S,tr,R)
MATRIX OF DIFFERENCES AT EACH CONTROL SURFACE AT EACH TRACE
27
FIELD RECORDS
28
TIME VARIANT APPLICATION OF ΔT MATRIX
29
cdp PROCESSING FOR VELOCITY AND STACK
30

Fig. 1