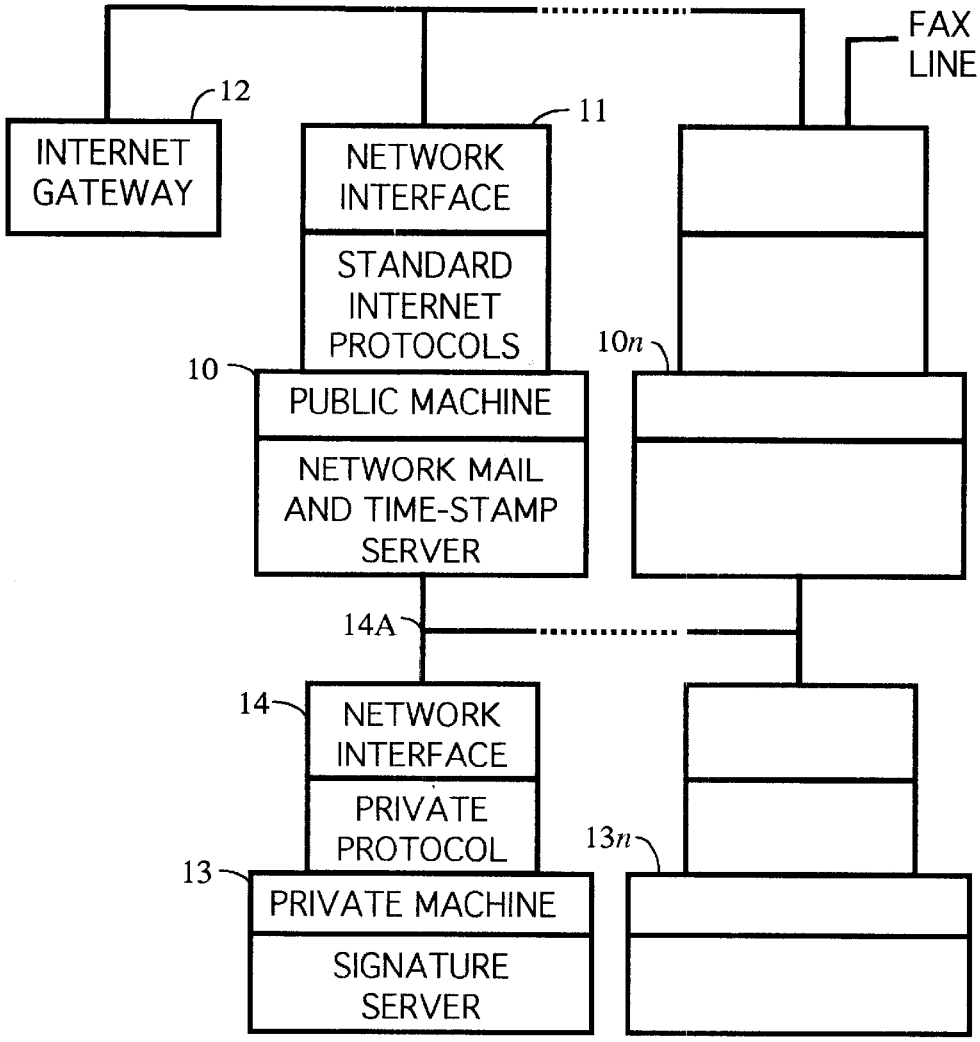
FAX
LINE
12
11
INTERNET
GATEWAY
NETWORK
INTERFACE
STANDARD
INTERNET
PROTOCOLS
10n
10
PUBLIC MACHINE
NETWORK MAIL
AND TIME-STAMP
SERVER
14A
14
NETWORK
INTERFACE
PRIVATE
PROTOCOL
13n
13
PRIVATE MACHINE
SIGNATURE
SERVER

FIG. 1